HTE-88 and HTE-1212
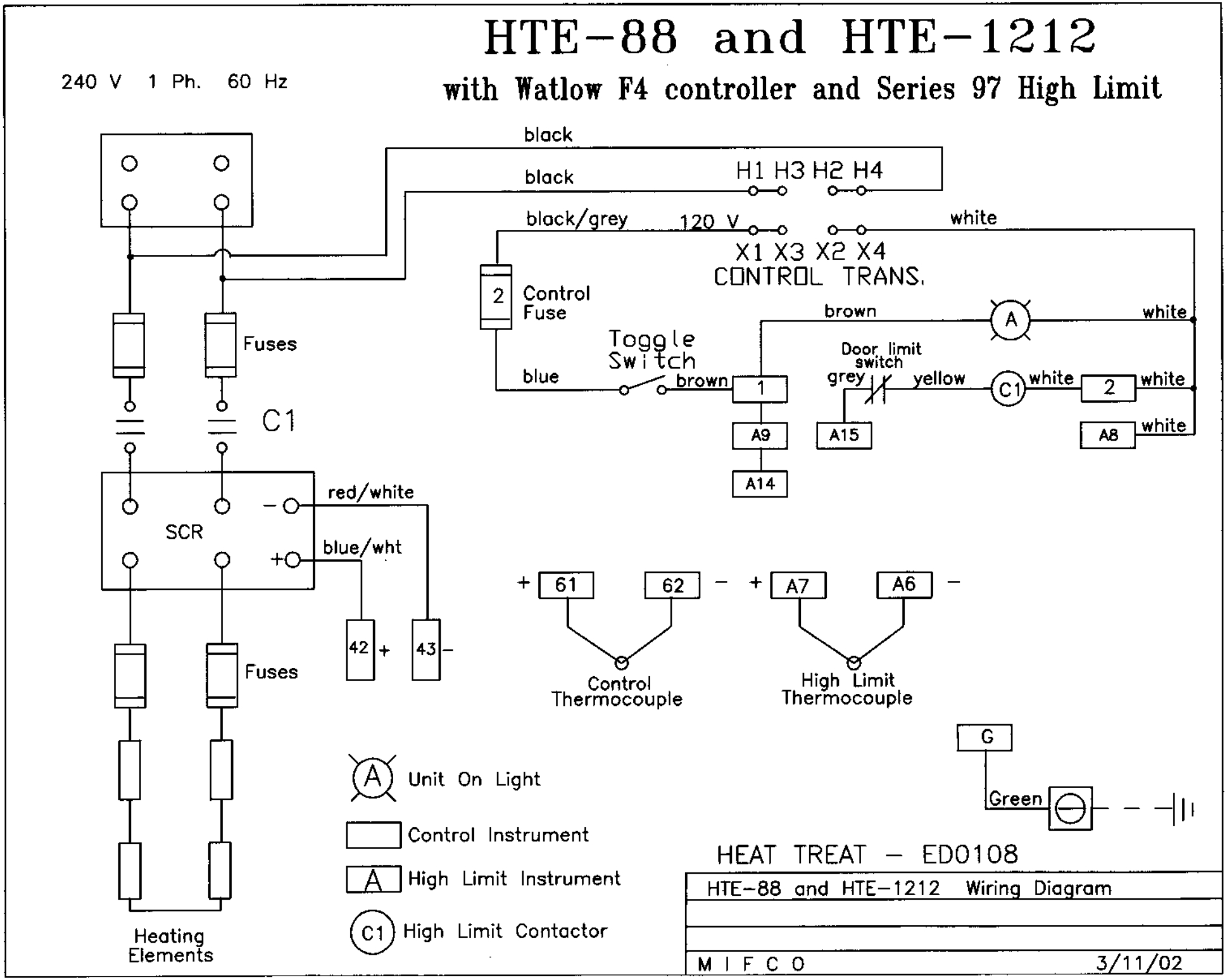
with Watlow F4 controller and Series 97 High Limit