COMBUSTION SAFEGUARD SYSTEM NUMBER 6

G

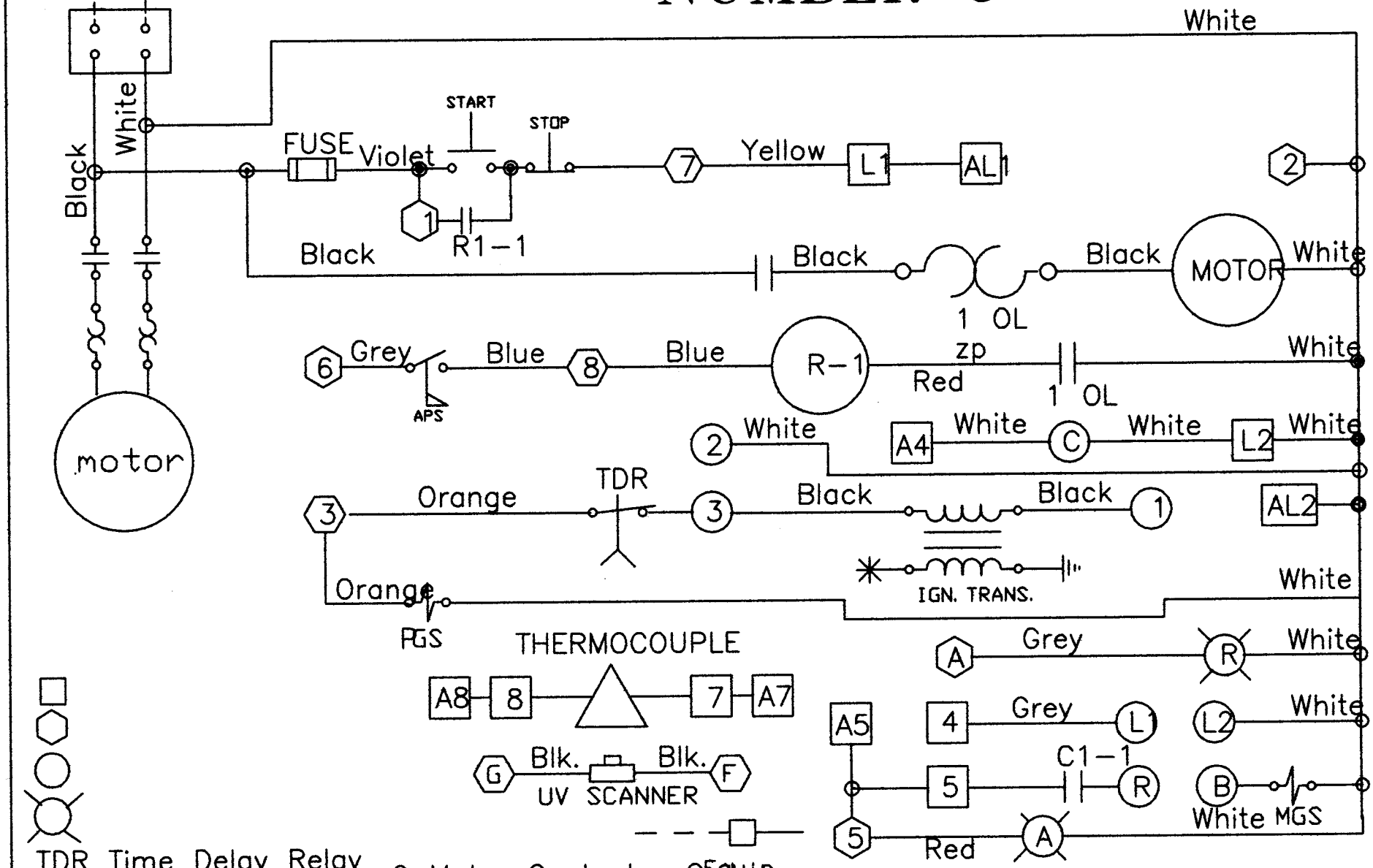

TDR Time Delay Relay
PGS PilotGas Solenoid
APS Air Presure Switch
1 OL Air Pres. Switch
R1 Blower Contactor
C Motor Contactor Coil
R-1,R-2 Relay Contacts
MGS Main Gas Solenoid

McEnglevan Ind. Furnace Mfg. Co. Inc.

HEAT-TRE\ED0004