MTE-2424-36 Medium Temperature Furnace
Watlow F4 Controller and Series 97 High Limit

Power Supply
230V / 460V
3 Ph / 60 Hz

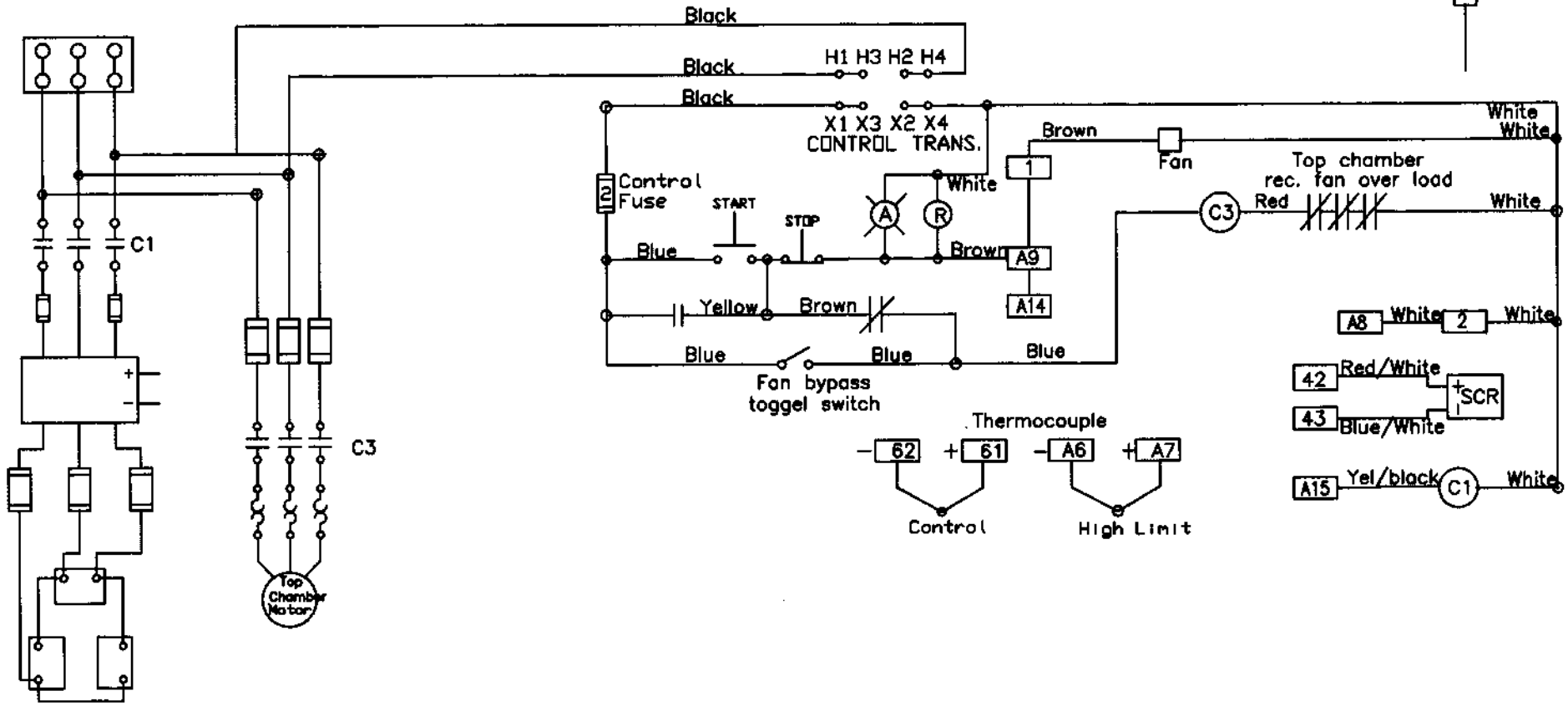

Control Inst.Terminals
High Limit Cont. Term.
Contactor Coils
Door inter lock
Inst. Cabinet Cooling Fan

HEAT TREAT – ED-0114

MTE-2424-36 Medium Temperature Furnace	
Wiring Diagram 230/460V.3 Ph.,60 Hz.	
M I F C O	3/12/02