SWIF MUL MODELS ML-65 AND ML-125

INSTALLATION

LOCATION

The machines are shipped completely assembled, ready to use. Both Models ML-65 and ML-125 are portable and require no special footing. They should be set and operated on a solid, level floor. The machines do not need to be bolted to the floor. Be sure to operate the muller in a location to provide adequate working space for loading and unloading the machine.

WORKING HEIGHT

Both models are designed with black iron pipe legs, so the overall, and the working height, can be varied by changing the length of the muller legs. The legs of both the ML-65 and ML-125 machines are built with round end, cast aluminum plug inserts, driven into the floor end of the pipe legs. The plug inserts can be driven from the legs by inserting a 3/4" rod through the leg and driving against the plug insert.

To change the legs of the Model ML-65, remove the pipe leg from the threaded hole in the base. Drive the foot insert casting from the pipe leg. Cut and thread new 1¼" Schedule 40 pipe to the desired length, drive foot insert into plain end of pipe leg. Screw legs into the threaded holes in the base casting.

To change the leg length of the Model 125, proceed as above, except thread the bottom ends of the 2" pipe legs after driving the foot castings from the pipe leg. Then use a 2" pipe coupling and pipe nipple to extend leg to desired length. Bolt extended leg to the muller base.

PORTABLE FEATURE OPTION

The Models ML-65 and ML-125 can be furnished with a detachable wheeled unit, so the machine can be moved easily from one shop location to another. The portable features can be purchased separate, and can be attached to machines already in the field. Instructions show how to remove the two standard legs and install the wheeled assembly.

ELECTRICAL CONNECTION

Customer must provide properly fused disconnect switch box at the machine locations. Check the motor voltage on both the muller name plate and the motor end bell. If voltage must be changed, refer to wiring diagram on succeeding pages.

Since the Models ML-65 and ML-125 mullers are built as portable machines, we suggest using Type S, 600 volt rubber covered power cord at least ten feet long. Lead size should be 10 gauge three wire for 115/230 single phase circuit, and 14 gauge four wire for 230/460 poly phase circuits. The following electrical plugs and receptacles, or their equivilent, are suggested.

Single phase three wire - Hubbell #2340 Receptacle with a #2341 grounded cap
Poly phase four wire - Hubbell #7410BG Receptacle with a Hubbell #7411G cap

If the local or area code requires a flexible metal conduit protective cover over the power cord, use 3/4" Greenfield Sealtite with Sealtite box connectors at the control box outlet. A Sealtite boot connector can be used at the cap end. Use a #7025 boot for three wire conductor and a #7541 boot for the four wire conductor. All control circuits are 115 volt grounded.

LUBRICATION

All machines are shipped with proper lubrication, however, we recommend checking the oil level in the gear box prior to operation. Models ML-65 and ML-125 are checked by removing the 1/4" pipe plug in the top half of the gear box housing. The pipe plug is located directly above the fillerpipe. The gear box capacity is three pints of high pressure gear lube. *USE ARCO PENNANT EPS 1000 OR EQUIVILENT.*

The double ball bearings in the muller wheels are permanently lubricated at time of assembly, and should not require additional service.

OPERATION AND MAINTENANCE

START-UP

Check mulling crosshead rotation (should be clockwise). If the crosshead rotation is wrong, reverse any pair of power input leads if the machine is equipped with a poly phase motor. *OVERLOADING EITHER MODEL WILL GREATLY IMPAIR THE MULLING ACTION, ESPECIALLY WITH OIL BASE SANDS SUCH AS PETRO BOND.* The load of sand will be pushed ahead of the plows and muller wheels. No mulling or kneading of the sand mass will occur.

Check motor ammeter if unit is equipped with Mull Cycle Control. Refer to the following chart. If amperage reading is high, open dump door and dump part of load until motor amperage reading is in correct operating range at start of mulling cycle.

FULL LOAD CURRENT FOR SWIF MUL MACHINES

Model Number	Motor HP Rating	Amperage 115/1 ph.	230.1 ph.	230/3 ph.	460/3 ph.
ML-65	1.0	11.5 amp	5.5 amp	3.3 amp	1.7 amp
ML-125	2.0	20.5 amp	10.0 amp	6.2 amp	3.1 amp
ML-250	3.0	29.2 amp	NA	9.2 amp	4.6 amp

SAND CAPACITIES
Maximum Per Load

Model Number	Green Sand New Mix	Water Bonded Remull Heap	Oil Bonded Sand New Mix or Remull
ML-65	55 lbs.	75 lbs.	65/70 lbs.
ML-125	110 lbs.	135 lbs.	125/135 lbs.
ML-250	250 lbs.	285 lbs.	260/275 lbs.

GEARING USUALLY REQUIRES A BREAK IN PERIOD OF SEVERAL HOURS AND THE EFFICIENCY MAY BE LOWER DURING THIS PERIOD. IT MAY BE NECESSARY TO RUN REDUCED LOADS TO LOWER MOTOR AMPERAGE LOAD READINGS TO CORRECT READING. AFTER BREAK-IN PERIOD, MULL THE NORMAL SIZE SAND MIX. ADJUST LOAD TO KEEP MOTOR AMPERAGE READING WITHIN OPERATING LIMITS.

OPERATION OF MULLER

1. Load machine with approximate quantities shown in above machine.

2. Close cover. Machines with the cover safety interlock have a plunger type micro switch, which is wired in series with the holding circuit of the magnetic starter The cover must be closed to complete the magnetic starter holding coil circuit.

3. Push "On" button, hold the lid micro switch in the closed position, and operate muller for about 30 seconds, while observing mulling action. If the muller is loaded beyond the maximum sand capacities shown in the above chart, no mulling action will take place. The sand will move ahead of the muller wheels and plows as a mass instead of being worked by the plows and wheels. To reduce the load to the correct capacity, open the discharge door and dump part of the load. *DO NOT OPERATE MULLER FOR FULL MULLING CYCLE WITH COVER OPEN, AND DO NOT PUT HANDS INSIDE MULLER BARREL WHILE MACHINE IS OPERATING.*

4. Empty machine by opening discharge door while muller is running, to push out and discharge load.

5. *CLEAN THOROUGHLY AFTER EVERY RUN OR SHIFT,* by scraping and removing sand mix with trowel or stiff brush, or by operating machine until clean with several shovels of clean, dry sand. *IF NO-BAKE, CO_2 OR CORE SANDS ARE PREPARED IN THE MACHINES, IT IS IMPARATIVE THAT ALL SAND IS REMOVED* from the mixer plows, muller wheels and barrel. Be sure to clean all sand from around the discharge door seal. *MAXIMUM MULLING EFFICIENCY IS DEVELOPED ONLY IN A CLEAN, HIGHLY POLISHED MULLER BARREL.* With proper care, the muller barrel, plows and bottom plate will become highly polished by the scouring action of the molding sand.

6. Do not overmul the sand. The new sand or used heap sand should be mulled according to the recommended time cycle. Do not mul hot sand. If it is necessary to cool the sand, spread it on the shop floor to cool, then mul the entire load.

Steps Of Operation For Mul Cycle Control System

1. Load the machine with the recommended quantity of foundry sand. If the operator is remulling their present sand heap, they should fill the muller with cleaned and riddled sand to the proper level as indicated on the outside of the muller cage. If the operator is preparing new sand, follow the mixing and mulling instructions found in another section of this manual on preparing new sand.

2. Close the muller lid to complete the lid interlock control circuit.

3. Flip the On-Off toggle switch to the On position, to energize the electrical control system. The control indicator light comes on.

4. Pre-set the timer to the desired number of minutes selected for the specific mulling cycle. The timer will repeat the pre-set time cycle. Any change in the duration of the mulling cycle must be made by resetting the timer.

5. Depress the start button located in the center of the timer set dial, and the unit will begin its mulling cycle.

6. Check the ammeter in the control panel while the unit is running, to see whether the amperage reading is in the green range. Do not run the unit when the ammeter needle is indicating in the red limit range.

7. When the mull cycle period is completed, the timer automatically shuts off the unit. Unlock the discharge door leaving it open.

8. Depress the special unloading button on the panel to unload the sand. The muller cover must be shut to unload the unit.

9. Having completed this operation, close the unloading door and lock the handle. The unit is ready for the next load.

10. After all of the sand has been mulled, clean the inner surface of the muller cage, the plows, and the wheels to prevent rusting or corrosion while the machine is setting idle. This is especially important when mulling green sand or no bake core sands.

EMERGENCY SHUT-DOWN CAN BE MADE IN THREE WAYS:

Lift the cover to break the lid interlock switch circuit. Flip the On-Off toggle switch to the "Off" position. Return the timer to "0" setting.

MULLING PETROLEUM BONDED SANDS

Due to the lubricity of oil bonded molding sands, such as Petro Bond, they tend to slide or move as a mass, ahead of the muller wheels and plows. *THIS ACTION WILL BE MORE PRONOUNCED IF THE MACHINE IS LOADED TO A GREATER CAPACITY THAN THAT RECOMMENDED.* A loading depth decal is located on the outside surface of the mulling barrel. The machine will not develope maximum sand properties if it is overloaded. Dump some of the sand to reduce the load.

If the sliding action prevails, it can be greatly reduced, or eliminated, by installing the four half-round steel bars packed separately inside the barrel of the muller. Fasten them in the vertical locations on the inside of the muller barrel. The bars are 3/16" thick and 7/16" wide, drilled and tapped. The length, and the number of bars, will vary according to the size and model number. They are simple to install or to remove.

THE BARS SHOULD ALWAYS BE REMOVED WHEN WATER TEMPERED OR NATURAL SANDS ARE MULLED OR PREPARED. The scouring action of the water tempered sands will polish the inside of the barrel. The polished surface greatly improves the mulling action of the machine. It is important to clean the muller properly after using.

Furan, Sodium Silicate and other no-bake or cold set core sand mixtures must be cleaned thoroughly from the muller, to prevent chemical attack and corrosion of the steel parts.

MAINTENANCE

MODELS ML-65 AND ML-125

1. Check gear box oil level every thirty days. Change oil every 2000 hours. Use Acro Pennant EPS-1000 or equivilent.

2. Inspect and lubricate upper drive spindle bearing and replace felt or seals every 2000 hours. Refer to part number 040011 on drawing. Motor bearings must be serviced according to the motor manufacturer's specifications.

3. Check and replace discharge door "O" ring seal as required. Refer to parts drawing for "O" ring seal number.

MODEL ML-250

1. Check oil level in gear case every week. Level must be above red line on site glass. Change oil every 2000 hours. Use Acro Pennant EPS-1000 or equivilent. Refer to gear case manufacturer bulletin enclosed.

2. Lubricate upper gear case roller bearings through the three grease fittings located on the electric line starter bracket. Use short fibre high pressure grease. Lubricate every week.

3. Inspect and lubricate upper drive spindle bearing and replace seal every 2000 hours. Motor bearings must be serviced according to the motor manufacturer's specifications.

4. Inspect and adjust vee belts every 500 hours of operation. Use Browning Gripbelt #3V450 or equivilent.

PLOW AND MULLER WHEEL ADJUSTMENT

Muller plows are hard faced at the leading edges and wear points with tungsten carbide hard surfacing. However, the abrasive action of silica sand causes rapid removal of all kinds of steels. Periodic adjustment of the machine components is required to compensate for normal wear.

Both plows should be adjusted to within approximately 1/16" of the bottom base wear plate. Spacers or flat washers are used for this adjustment. The outer plow is adjusted to within 1/8" to the barrel liner at its closest point of clearance. The smaller, inner plow must be adjusted to 1/16" clearance from the center drive spindle housing.

The muller wheels are adjusted to 1/8" clearance between the wheel and the base wear plate. This adjustment is made with the adjusting screw shown as Item 000906 in the parts drawing. Spring pressure against the sand load is adjusted with adjusting screw shown as Item 001390 in the parts drawing. Proper spring and muller wheel pressure should be adjusted as follows:

WHEEL HEIGHT ADJUSTMENT ABOVE WEAR PLATE

1. Run stop screws in until wheels touch crib bottom wear plate.

2. Place recommended amount of sand to be mulled in the muller crib.

3. Start the muller and allow it to make twenty revolutions to disperse the sand into an even layer. Stop the muller. One-half inch sand layer should be beneath each wheel.

4. Run the stop screws out until they hit the stops, then run back in one full turn.

This will minimize the formation of hard clods when dumping while still allowing full wheel pressure at all times.

WHEEL PRESSURE

The wheel pressure required for mulling varies from sand to sand. Generally, a good wheel pressure is that which will develope the molding properties of the sand in three to four minutes total mulling time. The sand in this case should be already prepared heap sand in good condition.

Replacement Of Worn Parts

The scouring action of silica sand, used in foundry and core sand mixes, is so severe that periodic replacement of four principle parts of the muller is required. These include the bottom wear plate, the muller barrel or barrel liner, the mixing plows and the muller wheels. The first three items are available in a special Abrasion Resistant steel, which normally provides four or five times the wear and abrasion resistance found in regular carbon steel plate and sheet. A R Steel is a special hardened medium carbon high manganese steel. The A R Steel parts have a different part number than the standard steel components and are normally available from factory stock.

When ordering replacements, be sure to give machine model, serial number and list replacement parts numbers. When ordering replacement electrical parts be sure to give, in addition to the above, the voltage, phase and cycles of the operating electric current. Refer to parts drawing and parts list pages.

REPLACEMENT OF MULLER WHEEL ASSEMBLY MODELS ML-65, ML-125 AND ML-250

The replacement muller wheel assembly consists of the new wheel, with a new axel, new sealed - pre lubricated bearings and new multi - lip sand seals. *DO NOT DISASSEMBLE THE WHEEL - BEARING UNIT OTHERWISE THE SAND SEALS ARE INVERTED AND ALLOW SAND TO ENTER THE BEARINGS.*

1. Remove the moisture dispersion funnel, part number 040123, from the plow head casting. Remove four bolts, part number 000908, from plow head casting and raise plow assembly from cross-head casting and wheel assembly.

2. Loosen two set screws, part number 001054, in drive shaft. Remove drive shaft bolt, part number 000930, from top end of drive shaft, and raise wheel assembly up off the drive shaft. *A wheel puller should be used to remove the cross-head casting. Evidence of hammer blows WILL NULLIFY ANY WARRANTY.*

3. Remove dowel point set screws, part number 000805, from wheel-axel casting since dowel point fits into drilled hole in the wheel axel.

4. Remove all sand or rust from the exposed portion of the axel and polish with sandpaper and lubricate to assist in its removal from wheel-axel casting, part number 040013.

5. Remove the wheel adjusting screw, part number 000906, with lock nut and reinstall in the new axel shaft.

6. Reinstall the new axel and wheel assembly into wheel-axel casting being sure that dowel point set screw, part number 000805, enters in the drilled recess hole in the new axel. Tighten set screw securely.

7. After replacing wheel-axel assembly in wheel-axel casting, replace casting and assembly on the drive shaft, align key way and replace square key, part number 040069. Tighten hex head bolt, part number 000930, being sure that washer, part number 002121, is in place. Tighten set screws, part number 001054, in the cross-head casting.

8. Replace the plow and spring assembly and secure with four bolts, part number 000908, being sure to use four lock washers, part number 002116, and two flat washers, part number 002115. Position the spring in its correct location so that spring tension adjusting bolt, part number 001390, is seated in the center hole in the tension spring.

9. Replace the moisture dispersion funnel.

10. Adjust wheel height and wheel pressure according to instructions in OPERATION AND MAINTENANCE section of Operating Manual.

REPLACEMENT OF PLOWS MODELS ML-65 AND 125

1. Remove the moisture dispersion funnel, part number 040123, from the plow head casting.

2. Remove bolts, part numbers 000908 and 000905, and remove outside plow.

3. Replace with new outside plow and bolt in place being sure to use both lock and flat washers. Rotate the wheel and cross-head assembly by hand to check clearance between bottom wear plate and bottom of the plow. If the plow rubs the bottom wear plate, raise the plow by using flat washers between the foot of the plow head casting. When proper clearance has been obtained, tighten hold down bolts.

4. Remove bolts, part number 000905, and remove inside plow assembly. Replace new plow and bolt in place. The inside plow can be adjusted vertically for proper clearance.

5. Replace the moisture dispersion funnel.

6. Recheck clearance by rotating cross-head assembly by hand to be sure the plows do not rub or bind against the bottom wear plate. Make final adjustment according to plow and muller wheel adjustment in OPERATION and MAINTENANCE section of Operating Manual.

REPLACEMENT OF BOTTOM WEAR PLATE MODELS ML-65 AND ML-125

1. Remove lid interlock switch from the edge of the muller crib, or shell. Remove the bolts from the bottom outer periphery of the crib or shell and raise lid and crib assembly off of the muller base.

2. Remove liquid dispersion funnel, part number 040123, from the plow head casting.

3. Remove four bolts, part number 000908, from cross-head casting and raise plow assembly up and off the wheel assembly.

4. Loosen the two set screws, part number 001054, in cross-head casting. Remove bolt, part number 000930, from the top end of the drive shaft and lift wheel cross-head assembly from drive shaft. *A wheel puller should be used to remove the assembly from the shaft. Evidence of hammer blows on the casting WILL NULLIFY THE WARRANTY.*

5. Remove the hold down screws, part number 000454, from the base wear plate and lift worn wear plate from muller base. Remove the small plate covering the discharge door. *If the O-ring seal around the drive shaft housing is worn, replace with 2-5/8" I.D. x 1/8" standard O-ring for the ML-65 or 3" O.D. x 1/8" standard O-ring for the ML-125. If the door seal needs replacement, replace with standard O-ring 5-1/2" x 1/4" for the ML-125.*

6. Remove all residue or dirt from base surface and install new base wear plate and discharge door plate.

7. Install wheel assembly on drive shaft and align key way. Insert 1/4" square key, part number 040069. Replace drive shaft bolt, part number 000930, and washer, part number 002121, and tighten securely. Retighten two set screws, part number 001054, in cross-head casting.

8. Replace the plow and spring assembly and secure with four bolts, part number 000908, being sure to use four lock washers, part number 002116, and two flat washers, part number 002115. Located tension spring in proper position with adjustment bolt setting in the center hole of the spring.

9. Replace the liquid dispersion funnel.

10. Replace crib on muller base and resecure the four base bolts. Reinstall lid interlock switch. Electrical connections are fastened to terminals marked *Common* and *Normally Open.*

REMOVAL AND REPLACEMENT OF GEAR BOX ASSEMBLY MODELS ML-65 AND ML-125

1. Remove lid interlock switch from the top edge of the muller crib, or shell. Remove the bolts from the bottom outer periphery of the crib or shell amd raise lid and crib assembly off of the muller base.

2. Remove liquid dispersion funnel, part number 040123, from the plow head casting.

3. Remove four bolts, part number 000908, from the cross-head casting and raise the plow assembly up and off the wheel assembly.

4. Loosen the two set screws, part number 001054, in cross-head casting. Remove bolt, part number 000930, from the top end of the drive shaft and lift wheel cross-head assembly from drive shaft. *A wheel puller should be used to remove the assembly from the shaft. Evidence of hammer blows on the casting WILL NULLIFY THE WARRANTY.*

5. Remove the hold down screws, part number 000454, from the base plate and lift worn wear plate from muller base. Remove drive shaft housing O-ring seal. *If the O-ring seal around the drive shaft housing is worn, replace with 2-5/8" I.D. by 1/8" standard O-ring for the ML-65 or 3" O.D. x 1/8" standard O-ring for the ML-125.*

   NOTE: MODEL ML-125 ONLY - REMOVE SEAL RETAINING CUP, PART NUMBER 040257, FROM TOP OF DRIVE SHAFT HOUSING, AND REMOVE FLAT NYLON AND RUBBER SEALS. REMOVE SEAL SLEEVE, PART NUMBER 040254, FROM DRIVE SHAFT.

6. Lay muller base and leg assembly on side to facilitate removal of drive assembly.

7. Remove three gear box mounting bolts, part number 001515, which secures gear box to muller base, and pull gear box-motor assembly from muller base.

8. Remove four 3/8" motor bolts, and separate motor from adaptor housing casting, part number 040051.

9. Remove four 3/8" bolts, and remove motor adaptor housing, part number 040051, from gear box.

10. Loosen set screws, part number 000802, in gear box half of universal joint, part number 040052, and remove universal joint.

11. Remove air vent plug, part number 003460, from the top half of the old gear box. Remove 1/8" pipe plug from top half of new gear box, and replace with air vent, part number 003460. Return 1/8" pipe plug to old gear box for return shipment of the old gear box to factory.

12. Reassemble gear box half of universal joint on drive shaft. *The end of the gear box shaft should not protrude beyond the inner surface of the universal joint, otherwise, the rubber insert of the universal joint will receive excessive wear from the shaft.* Tighten the universal joint set screw securely against the square key in the drive shaft.

13. Reassemble the motor adaptor housing, part number 040051, to gear box.

14. Reassemble the motor to the gear box assembly and secure in place with the four hex bolts, part number 001205. Use care when realigning the rubber spider of the universal joint.

15. Insert drive shaft housing through center hole in muller base, and secure gear box to base with the three 1/2" bolts and lock washer.

16. Return muller base to upright position, replace O-ring seal and bottom wear plate.

17. *For Models ML-125 only - Replace sleeve seal, part number 040254, on drive shaft. Replace seal assembly which consists of four nylon washers, part number 040255, and three Buna N rubber washers, part number 040256. Replace seal retaining cap, part number 040257, and spacer washer, part number 040176, on top of seal sleeve on drive shaft.*

18. Reassemble per instructions outlined in REPLACEMENT OF BOTTOM WEAR PLATE.

REPLACEMENT OF GEARS AND BEARINGS IN GEAR CASE MODELS ML-65 AND ML-125

1. Follow the instructions outlining the REMOVAL AND REPLACEMENT OF GEAR BOX ASSEMBLY. Remove gear case from machine. Remove motor and motor adaptor housing from gear case.

2. Move gear box-drive shaft assembly to bench, remove all drain plugs, and drain all oil from gear box.

3. Remove the twelve bolts which fasten the two halves of the gear box together. Place gear box with bottom side up in bench vise. Take care to prevent marring drive shaft housing.

4. Separate the two gear box halves by screwing four 3/8" bolts into the threaded holes in the bottom half of the gear box housing flange. The bolts should be at least 2" long. Tighten bolts in sequence so the two halves of the gear box separates evenly. The gears should remain in the upper half of the gear box.

5. To remove and replace gears and bearings, place two small pry bars beneath the drive shaft gear, part number 040068, and raise the gear assembly. It may be necessary to alternate raising the intermediate pinion gear, part number 040067 and the motor drive pinion gear, part number 040064, until all are free of the bearing cavities in the gear case.

6. Move the top half of the gear case to an arbor press, with the drive shaft up. Press the drive shaft, part number 040250, down through the housing until it is free from the upper drive shaft bearing, part number 040251. Remove drive shaft housing.

7. Remove oil seal, part number 040063, from bottom half of gear box. Remove drive shaft bearing, part number 040251, from drive shaft housing, part number 040252.

8. Remove old gaskets from gear box flange, and clean both halves of gear box housing to remove all foreign material.

9. Replace drive pinion seal, part number 040063, using a sealent similar to "Loctite" to prevent seepage around the outer periphery of the seal.

10. Replace upper drive shaft bearing, part number 040251, if required.

TO REPLACE WORN GEARS OR BEARING ASSEMBLIES, DISASSEMBLE THE BEARING-GEAR SHAFT ASSEMBLIES WITH A GEAR PULLER. REMOVE BEARINGS FROM GEAR BOX HOUSING WITH GEAR OR BEARING PULLER ATTACHMENTS IF THEY REMAIN IN GEAR BOX CASTING.

11. To replace the bearings and gear of the main drive shaft assembly, remove the two set screws, part number 001062, from the gear hub, part number 040068, then remove gear and bearings with gear puller. Clean shaft and replace gear and bearings with new units.

12. Remove intermediate pinion, gear and bearing, part number 040067, as instructed above, disassemble and replace components as needed, per instructions in Step #11.

13. After the replacement gears, shafts, pinions, and bearings are reassembled into three separate units of the gear train, the gear train is reassembled in the bottom half of the gear case as follows: Apply grease to the seal side of the drive pinion, part number 040064, and put motor drive end of the drive pinion through gear case seal, part number 040063. Be very careful that you do not invert the inner seal ring while pressing the end of the drive pinion into place. This seal will be in the bottom of the gear case while the muller is operating. If the inner seal is inverted during assembly, oil will leak from the gear case into the motor. Before seating the drive pinion bearing, part number 040065, position the intermediate pinion assembly and the drive shaft with gear, part number 040068, and gear assembly with gear, part number 040067, in their proper location. With all three gear assemblies in position in the lower half of the gear case, using a plastic or soft tip hammer and carefully seat all components in the gear case. It will be necessary to progressively tap one shaft assembly after another until the gear shafts and roller bearings are seated in the gear case.

14. Replace gaskets on the gear case.

15. Place the bottom half of the gear case on the top half, and align the bearing in the casting recesses. When in position, tap the bottom half of the gear box gently and evenly so the bearings will enter the bearing recesses. The two dowel pins in the gear case will assist gear and bearing alignment.

16. Replace the twelve 1/4" bolts around the gear box and tighten them progressively so that the two halves of the gear case are drawn together even and tight enough to seal against oil leakage.

17. Reassemble the universal joint being sure to locate the 3/16" key on the drive pinion shaft. Locate the shaft about 1/16" below the surface of the rubber center insert of the universal joint, otherwise, the tip of the shaft will cause undue wear of the rubber insert.

18. Remount the motor adaptor, part number 040051, to the gear box, and reassemble the motor to the motor adaptor casting. Bolt the gear box-motor assembly back on to the muller base, and reassemble per instructions in REMOVAL AND REPLACEMENT OF GEAR BOX ASSEMBLY.

19. Fill gear box with gear lube as instructed in lubrication instructions of this manual. Use three pints of high pressure gear lube.

REPLACEMENT OF PLOWS FOR MODEL ML-250

1. Remove the plow arm bolts, and remove the inner plow from cross-head casting, part number 040421.

2. Replace with the new inside plow, and adjust the height so the plow clears the bottom plate between 3/32" and 1/8".

3. Remove the outside plow arm, and remove the old plow plate from the plow arm. Replace the new plow plate, and tighten bolts securely. Bolt the old plow arm-plate assembly back on the cross-head casting. Rotate the cross-arm plow assembly by hand to check plow clearance against crib liner and bottom wear plate. The outside plow-side liner clearance is adjustable. The clearance between the plow plate and the bottom wear plate can be increased by adding flat washers between the cross-head casting, and the plow arm.

REPLACEMENT OF BOTTOM WEAR PLATE AND CRIB LINER FOR MODEL ML-250

1. Disconnect all electrical power to the machine.

2. Remove lid interlock switch from the top edge of the muller crib, or shell. Remove the bolts from the bottom outer periphery of the crib and raise lid and crib assembly off of the muller base, part number 040459.

3. Remove four bolts, part number 001461, from cross-head casting and raise the plow and spring assembly up and off the wheel assembly.

REMOVAL AND REPLACEMENT OF GEAR BOX ASSEMBLY FOR MODEL ML-250

1. Disconnect all power leads to machine.

2. Remove plow and spring assembly by removing four 7/16" bolts,part number 001461, and lift assembly from cross-head casting.

3. Remove plow head bolts, part number 001525, which holds the cross-head wheel assembly in position. Remove two set screws, part number 001380, from the side of the cross-head wheel casting, and use a large gear puller to remove the entire wheel assembly.

4. Remove belt guard, part number 040499, and dump chute, part number 040492. Disconnect lubricating lines between gear box and motor starter plate.

5. Remove gear box assembly, part number 040438, by removing the three 3/4" bolts, part number 001807, (this may be accomplished better by removing the muller cover and turning the machine upside down).

6. Remove drive shaft housing bolts, part number 001557, and remove drive shaft housing, part number 040451. Check the housing bearing, part number 040450,and replace if necessary.

7. Remove the sand slinger casting, part number 040447, from drive shaft.

8. Remove gear box mounting casting, part number 040510 from gear box.

9. Loosen set screws on set dollar, part number 040448, and remove collar from the bottom of the drive shaft.

10. Remove the set screws on both sides of the gear box collar which hold the drive shaft, part number 040449, in place. Remove the drive shaft from the gear box by pulling the long end of the shaft.

REASSEMBLY OF COMPONENTS INTO NEW GEAR BOX ASSEMBLY

1. Clean the drive shaft of all dirt or burrs, and reassemble it in the new gear box. Do not tighten the four set screws located in the sleeve of the gear box too tight at this step in the reassembly of the drive shaft.

2. Replace gear box mounting casting, part number 040468, sand slinger casting, part number 040447, and drive shaft housing, part number 040451.

3. Rebolt gear box assembly back to the muller base. Return machine to its upright position.

4. Replace the wheel and plow assembly and spacer, part number 040454, on drive shaft. Secure cross-head wheel drive casting on drive shaft with cross-head bolt, part number 001525. Replace and tighten set screws, part number 001380 on the side of the cross-head wheel drive casting.

5. Refer to Step 1, and at this point in the assembly, securely tighten the four set screws in the top and bottom of the sleeve that hold the drive shaft, part number 040449, in position. Then replace the set collar, part number 040448 and tighten securely in place.

6. Replace drive belts, and adjust to the proper tension. Replace belt guards,part number 040499, and dump chute, part number 040492. Reconnect the lubricating lines to the new gear box.

7. Replace the plow and spring assembly to the wheel cross-head casting. Rotate the wheel and plow assembly by hand to check clearance between the plows and the bottom wear plates.

8. Replace the machine cover and all electrical connections. Check rotation before releasing machine for production operation.

4. Remove the hold down screws, part number 000903, from the base wear plate, and lift the worn wear plate sections from the muller base. Remove the smaller plate screws, and lift the smaller plate from the discharge door. If the seal gasket is worn, replace with 8-1/2" I.D. x 1/4" standard O-ring. If the seal around the drive shaft housing is worn, replace with a 4" I.D. x 1/8" standard O-ring. An easy method of replacing the drive shaft housing seal is to cut the new O-ring at an angle, install it around the shaft, then reglue the slice into a ring. Clean all sand from surface of muller base and install new bottom wear plate and discharge door plate.

5. Remove crib liner, part number 040478. If the liner is worn, it can be turned so the worn section is up, and the bottom half will not receive wear. When both the top and bottom halves of the inner surface of the crib linner are worn, the entire liner is replaced.

6. Place the muller crib with the new crib liner on the base, and rebolt the muller crib in place. Seat crib side liner against bottom wear plate. Reconnect the lid interlock microswitch connections to terminals marked "Common" and "Normally Open".

7. Replace the plow assembly and rotate the wheel and plow assembly once by hand to be sure of proper clearance between plows and new wear plate and crib liner.

REPLACEMENT OF SECTIONAL HEAVY DUTY BOTTOM WEAR PLATE FOR MODEL ML-250

The heavy duty bottom wear plate is supplied as a three sectional disc. This simplifies wear plate replacement and more suitable for more severe application where frequent replacement of wear plate is necessary.

The standard two piece wear plate supplied with the machine must be removed per the above instructions. Once the heavy duty wear plate has been installed, replacement is made as follows:

1. Disconnect all power leads to machine.

2. Remove the plow arm bolts and remove the inner plow from the cross-head casting, part number 040421.

3. Remove the outside plow arm and the plow assembly from the machine.

4. Remove all wear plate hold down screws, part number 000903, from the base wear plate and from the discharge door plate.

5. Remove crib side liner bolts and lid interlock switch bolts from muller barrel, and remove crib side liner and set aside.

6. Turn muller wheels so that they clear the one-third sections of the bottom wear plate, and remove the three bottom wear plate sections starting with the discharge door section.

7. Remove discharge door plate, and remove and replace door seal if necessary. Install new discharge door wear plate.

8. Inspect drive shaft housing seal,and replace with new O-ring seal as instructed in Step #4 of the preceeding instructions.

9. Clean all sand from surface of muller base and reinstall new bottom wear plate sections.

10. Reinstall crib liner, part number 040478.

11. Replace plows and adjust for proper clearance between the bottom of the plow and the bottom wear plate. The inner plow is adjustable by raising or lowering the plow assembly. The outer plow must be raised by placing additional flat spacer washers between the plow arm and the plow arm casting.

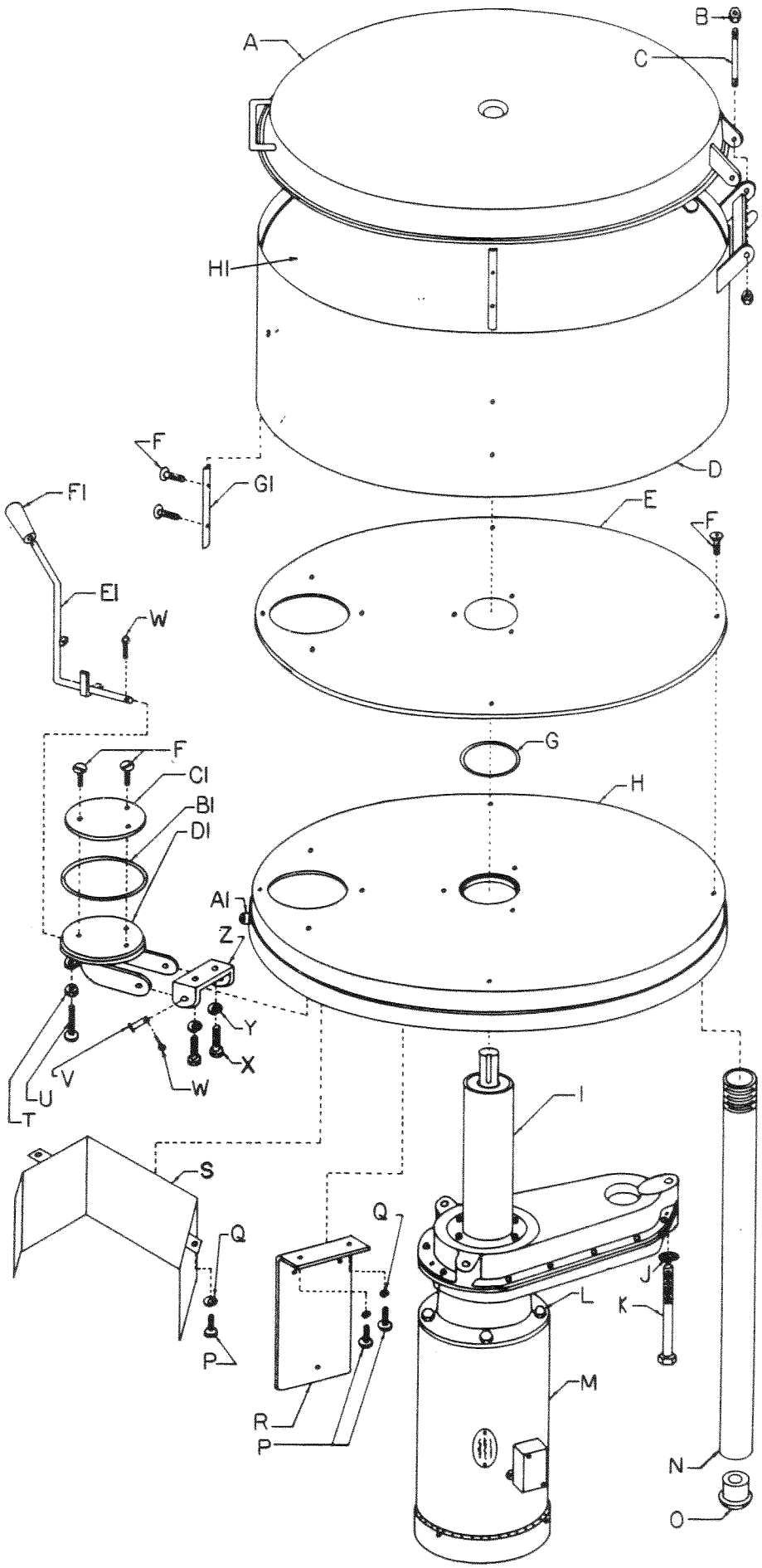

McENGLEVAN

SWIF-MUL

ML-65 BASE AND TUB ASSEMBLY

			Qty
A	040110	Muller Lid Assembly	1
B	002016	3/8"-16 Hex Jam Nut	2
C	040114	3/8" Hinge Pin	1
D	040106	Muller Shell Assembly	1
E	040083	Base Wear Plate AR	1
F	000454	#10-24 x 1/2" Flat Head Machine Screw	21
G	040097	1/8" x 2 1/2" 'O' Ring	1
H	040081	Muller Cast Base	1
I	040060	Gear Box Assembly	1
J	002132	1/2" Lock Washer	3
K	001515	1/2" x 4" Hex Head Cap Screw	3
L	001205	3/8" x 1" Hex Hd Screw	4
M	004122	1 HP, 1725 RPM, 115/230V, 60 HZ, 1 PH	1
	or		
	004121	1 HP, 1725 RPM, 230/460V, 60 HZ, 3 PH	
N	040102	Muller Legs	3
O	040101	Drive In Feet	3
P	000702	1/4" x 5/8" Hex Head Machine Screw	4
Q	002112	1/4" Lock Washer	4
R	040139	Control Box Mount Bracket	1
S	040120	Dump Chute	1
T	002008	1/4" Hex Nut	2
U	000611	1/4" x 1 1/2" Rd Head Machine Screw	2
V	040091	5/16" x 1 1/2" Hinge Pin	2
W	040086	1/8" x 1" Cotter Pin	3
X	000909	5/16" x 3/4" Hex Head Cap Screw	2
Y*	002116	5/16" Lock Washer	2
Z*	040089	Dump Door Bracket	1
A1	001403	3/8" x 3/4" Socket Head Cap Screw	1
B1	040098	6" Flat Seal Ring	1
C1	040085	Dump Door Wear Plate AR	1
D1	040084	Dump Door	1
E1	040092	Dump Door Lever	1
F1	040093	Dump Door Lever Handle	1
G1	040281	Shell Ribs	4
H1	040107	Crib Liner	1

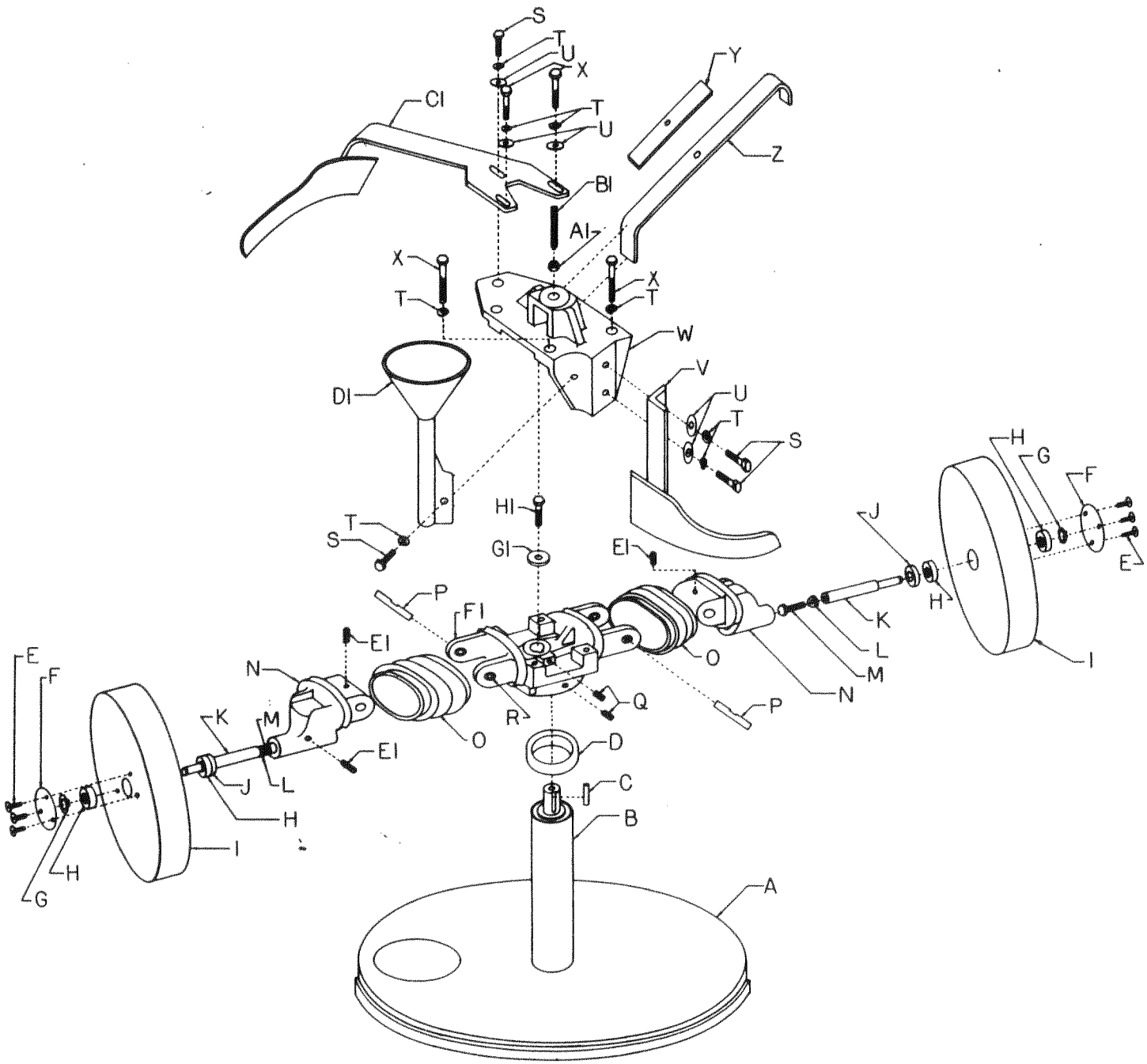

McENGLEVAN

SWIF-MUL

ML-65 PLOW AND WHEEL ASSEMBLY

			Qty
A	040081	Muller Cast Base	1
B	040060	Gear Box Assembly	1
C	040069	1/4" x 1" Square Key	1
D	040011	Felt Seal	1
E	000453	#10-24 x 1/2" Self Tapping Screw	6
F	040420	Bearing Cap	2
G*	040017	Retaining Ring	2
H*	040023	Wheel Bearing	4
I	040021	Muller Wheel	2
J*	040022	Thomas Quad Seal	2
K*	040016	Axle	2
L	002013	5/16" Lock Nut	2
M	000906	5/16" x 1 1/4" Hex Head Machine Screw	2
N	040013	Axle Casting	2
O	040015	Rubber Boot Seal	2
P	040014	3/8" x 2 1/2" Pin	2
Q	001054	5/16" x 1/2" Socket Head Set Screw	2
R	040027	Pivot Pin Bushing	4
S	000905	5/16" x 1" Hex Head Cap Screw	3
T	002116	5/16" Lock Washer	7
U	002115	5/16" Flat Washer	6
V	040041	Inside Plow Assembly	1
W	040025	Plow Drive Casting	1
X	000908	5/16" x 1 3/4" Hex Head Cap Screw	4
Y*	040028	6" Tension Spring Leaf	1
Z*	040029	9 3/4" Curved Tension Spring Leaf	1
A1*	002016	3/8" Jam Nut	1
B1*	001390	3/8" x 2" Dog Point Screw	1
C1	040031	Outside Plow Assembly	1
D1	040123	Aluminum Funnel	1
E1	000805	1/4" x 1/2" Socket Head Set Screw	4
F1	040012	Wheel Drive Casting	1
G1	002121	3/8" Flat Washer	1
H1	000930	5/16" x 1 1/4" Hex Head Cap Screw	1
*	040026	Tension Spring Leaf Assembly (Includes A1, B1, Y, Z)	1
*	040141	Replacement Wheel Bearing Cartridge (Includes K, H, J, G)	2

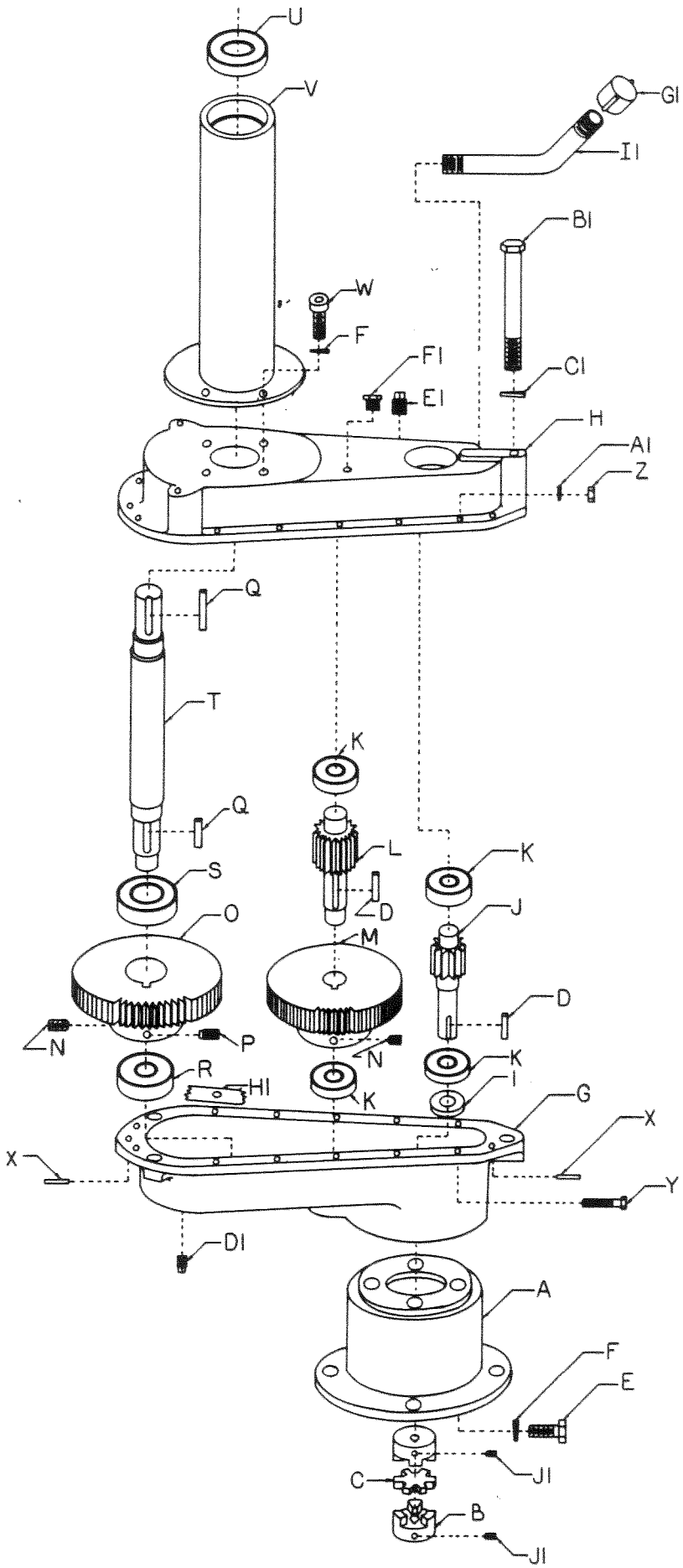

McENGLEVAN

SWIF-MUL

ML-65 GEAR BOX ASSEMBLY

			Qty
A	040051	Motor Adaptor	1
B	040052	Universal Joint	1
C	040056	Universal Joint Rubber Insert	1
D	040053	3/16" Sq x 3/4" Key	2
E	001205	3/8" x 1" Hex Head Screw	4
F	002122	3/8" Lock Washer	8
G	040061	Lower Half Gear Box	1
H	040062	Upper Half Gear Box	1
I	040063	Drive Pinion Seal	1
J	040064	Drive Pinion Gear	1
K	040065	Int. Pinion Bearing	4
L	040066	Intermediate Pinion	1
M	040067	Int. Pinion Spur Gear	1
N	001053	5/16" x 3/8" Socket Head Set Screw	2
O	040068	Drive Shaft Spur Gear	1
P	001062	5/16" x 1/2" Dog Point Set Screw	1
Q	040069	1/4" Square x 1" Key	2
R	040070	Drive Shaft Bottom Brg	1
S	040071	Drive Shaft Middle Brg	1
T	040072	Drive Shaft	1
U	040071	Drive Shaft Upper Brg	1
V	040074	Drive Shaft Housing	1
W	000902	5/16" x 5/8" Socket Head Cap Screw	4
X	040078	1/4" x 3/4" Dowel Pin	2
Y	000708	1/4" x 1" Hex Head Bolt	10
Z	002008	1/4" Hex Nut	10
A1	002112	1/4" Lock Washer	10
B1	001515	1/2" x 4" Hex Head Cap Screw	3
C1	002132	1/2" Lock Washer	3
D1	003323	3/8" Black Steel Plug	1
E1	003322	1/4" Black Steel Plug	1
F1	003460	1/8" Brass Air Vent	1
G1	003330	3/8" Fill Cap	1
H1	040079	Gear Box Gaskets	2
I1	040088	Gear Box Fill Pipe	1
J1	000802	1/4" x 5/16" Set Screw	2

McENGLEVAN

SWIF-MUL

PM-65 PORTO UNIT

			Qty
A	003113	1 1/4" x 4 1/2" Nipple	2
B	003433	1 1/4" Floor Flange	4
C	040726	Porto Unit Frame Assy	1
D	003507	8" Muller Wheel	2
E	001215	3/8" x 3 1/2" Hex Hd Screw	2
F	002122	3/8" Lock Washer	2
G	002126	7/16" Flat Washer	4
H	040735	Axle	2
I	002121	3/8" Flat Washer	2
J	002015	3/8" Hex Nut	2
K	000907	5/16" x 1 1/2" Hex Head Cap Screw	8
L	002115	5/16" Flat Washer	16
M	002011	5/16" Hex Nut	8

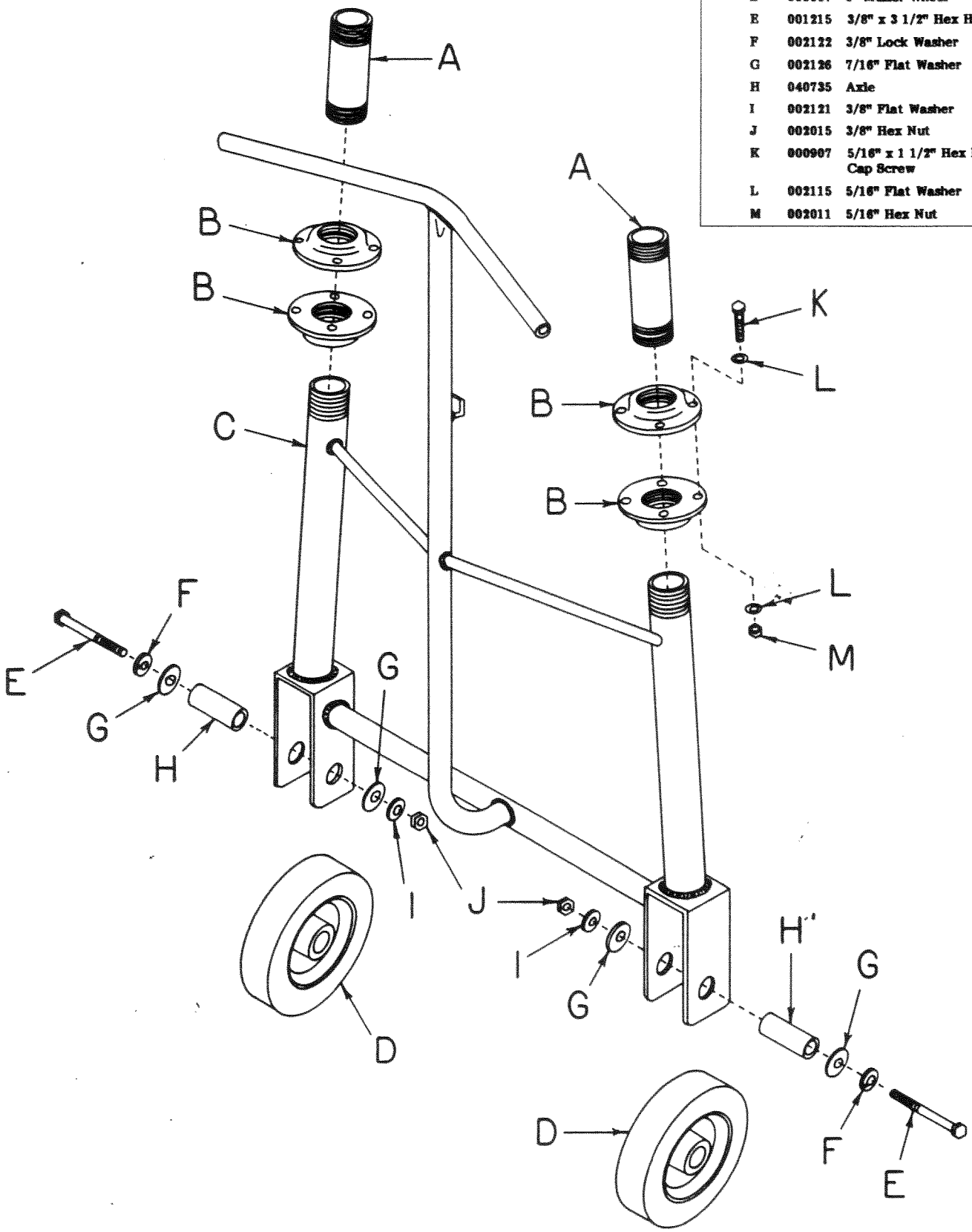

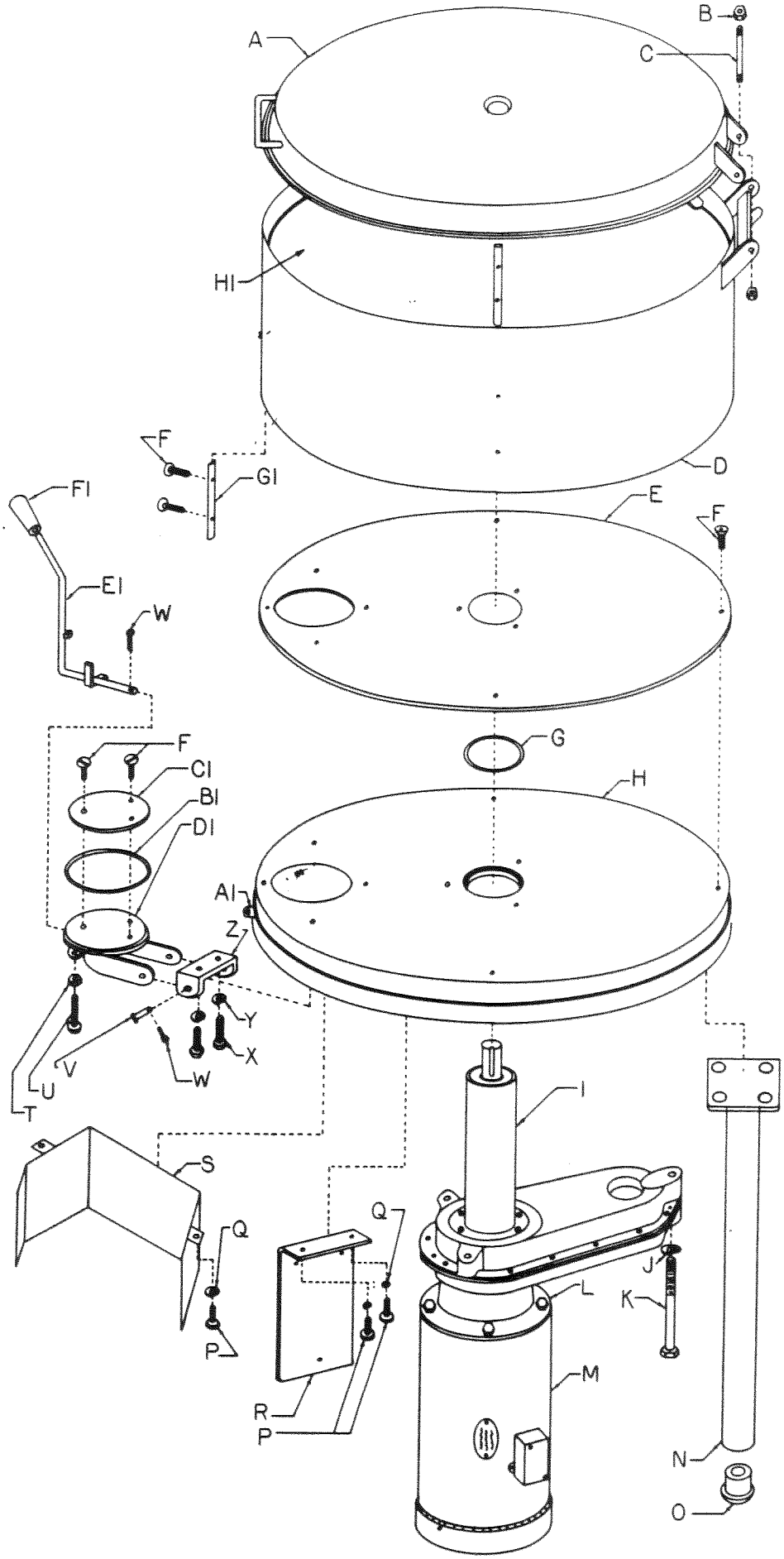

McENGLEVAN

SWIF-MUL

ML-125 BASE AND TUB ASSEMBLY

			Qty
A	040284	Muller Lid Assembly	1
B	002016	3/8-16 Hex Jam Nut	2
C	040114	3/8" Hinge Pin	1
D	040285	Muller Shell Assembly	1
E	040282	Base Wear Plate	1
F	000454	#10-24 x 1/2" Flat Head Machine Screw	21
G	040272	1/8" x 2 3/4" 'O' Ring	1
H	040262	Muller Cast Base	1
I	040247	Gear Box Assembly	1
J	002132	1/2" Lock Washer	3
K	001515	1/2" x 4" Hex Head Cap Screw	10
L	001205	3/8" x 1" Hex Head Screw	4
M	004126	2 HP, 1725 RPM, 230/460V, 60 HZ, 3 PH	1
	or		
	004127	2 HP, 1725 RPM, 115/230V, 60 HZ, 1 PH	1
N	040275	Muller Leg Assembly	3
O	040276	Drive In Feet	3
P	000702	1/4" x 5/8" Hex Head Machine Screw	4
Q	002112	1/4" Lock Washer	4
R	040139	Control Box Mount Bracket	1
S	040289	Dump Chute Assembly	1
T	002008	1/4" Hex Head Nut	2
U	000611	1/4" x 1 1/2" Round Head Machine Screw	2
V	040091	5/16" x 1 1/2" Hinge Pin	2
W	040086	1/8" x 1" Cotter Pin	3
X	000909	5/16" x 3/4" Hex Head Cap Screw	2
Y	002116	5/16" Lock Washer	2
Z	040267	Dump Door Bracket	1
A1	001403	3/8" x 3/4" Socket Head Cap Screw	1
B1	040271	7 1/4" Flat Urethane Seal	1
C1	040264	Dump Door Wear Plate AR	1
D1	040263	Dump Door	1
E1	040269	Dump Door Lever	1
F1	040093	Dump Door Lever Handle	1
G1	040281	Muller Rib	4
H1	040287	Crib Liner	1

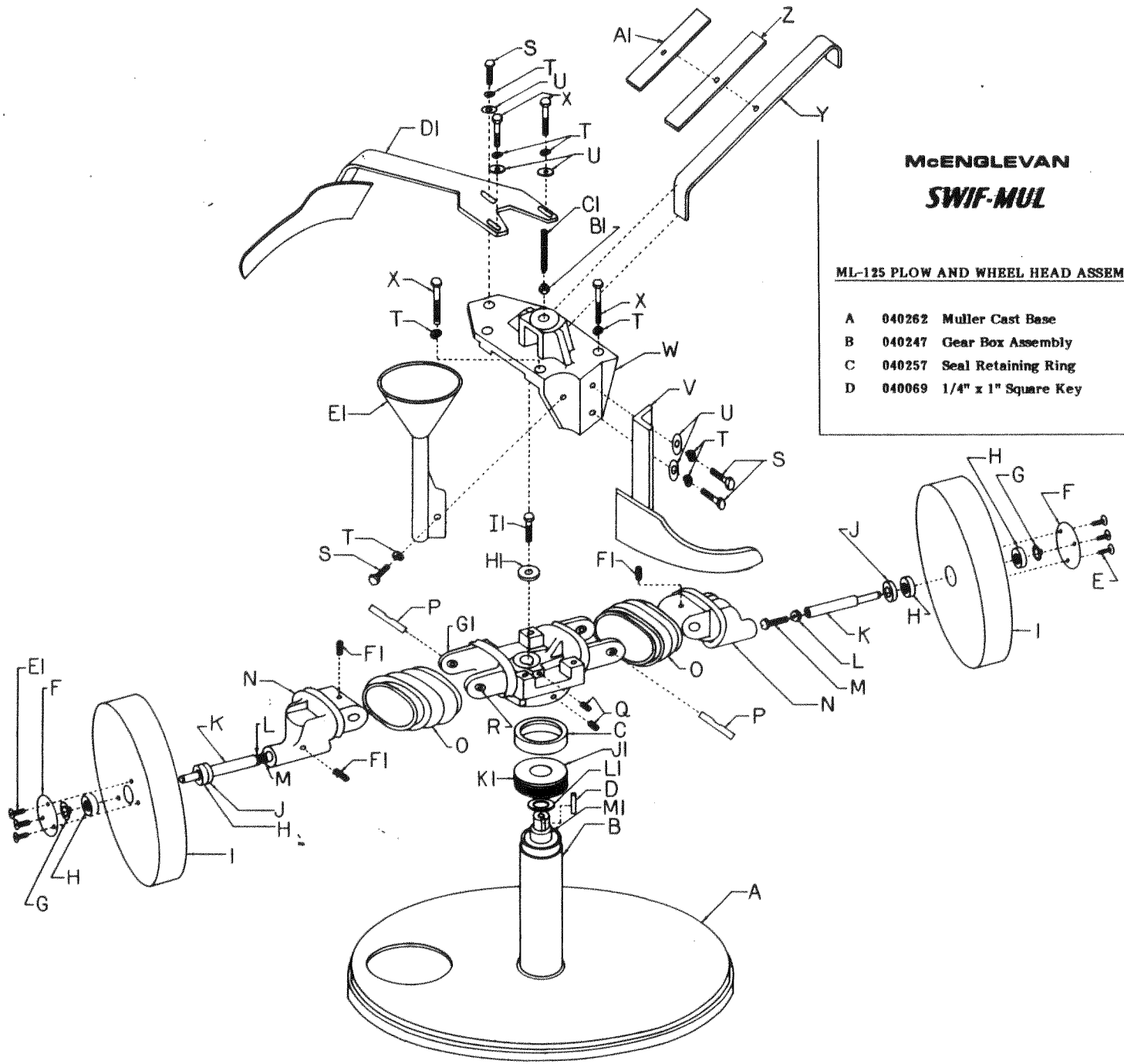

McENGLEVAN

SWIF-MUL

ML-125 PLOW AND WHEEL HEAD ASSEMBLY

			Qty
A	040262	Muller Cast Base	1
B	040247	Gear Box Assembly	1
C	040257	Seal Retaining Ring	1
D	040069	1/4" x 1" Square Key	1

E	000453	#10-24 x 1/2" Self Tapping Screw	6
F	040420	Bearing Caps	2
G*	040017	Retaining Ring	2
H*	040023	Wheel Bearing	4
I	040217	Muller Wheels	2
J*	040022	Thomas Quad Seals	2
K*	040215	Axle	2
L	002013	5/16" Lock Nut	2
M	000906	5/16" x 1 1/4" Hex Head Machine Screw	4
N	040212	Axle Casting	2
O	040214	Rubber Boot Seal	2
P	040213	Axle Pivot Pin 3/8" x 3"	2
Q	001054	5/16" x 1/2" Socket Head Set Screw	2
R	040027	Pivot Pin Bushing	4
S	000905	5/16" x 1" Hex Head Screw	3
T	002116	5/16" Lock Washer	7
U	002115	5/16" Flat Washer	6
V	040241	Inside Plow Assembly	1
W	040025	Plow Drive Casting	1
X	000908	5/16" x 1 3/4" Hex Head Cap Screw	4
Y*	040218	Curved Tension Spring Leaf	1
Z*	040219	8" Tension Spring Leaf	1
A1*	040028	6" Tension Spring Leaf	1
B1*	002016	3/8" Jam Nut	1
C1*	001390	3/8" x 2" Dog Point Screw	1
D1	040223	Outside Plow Assembly	1
E1	040123	Muller Funnel	1
F1	000805	1/4" x 1/2" Socket Head Set Screw	4
G1	040211	Wheel Drive Casting	1
H1	002121	3/8" Flat Washer	1
I1	000930	5/16" x 1 1/4" Hex Head Cap Screw	1
J1	040255	2 5/8" OD x 1 1/2" ID Nylon Seal Washer	4
K1	040256	2 5/8" OD x 1 1/4" ID Rubber Seal Washer	4
L1	040176	Drive Shaft Spacer	1
M1	040254	Drive Shaft Seal Ring	1
*	040229	Tension Spring Leaf Assembly (Inludes Y, Z, A1, B1, C1)	1
*	040304	Replacement Wheel Bearing Cartridge (Includes G, H, J, K)	2

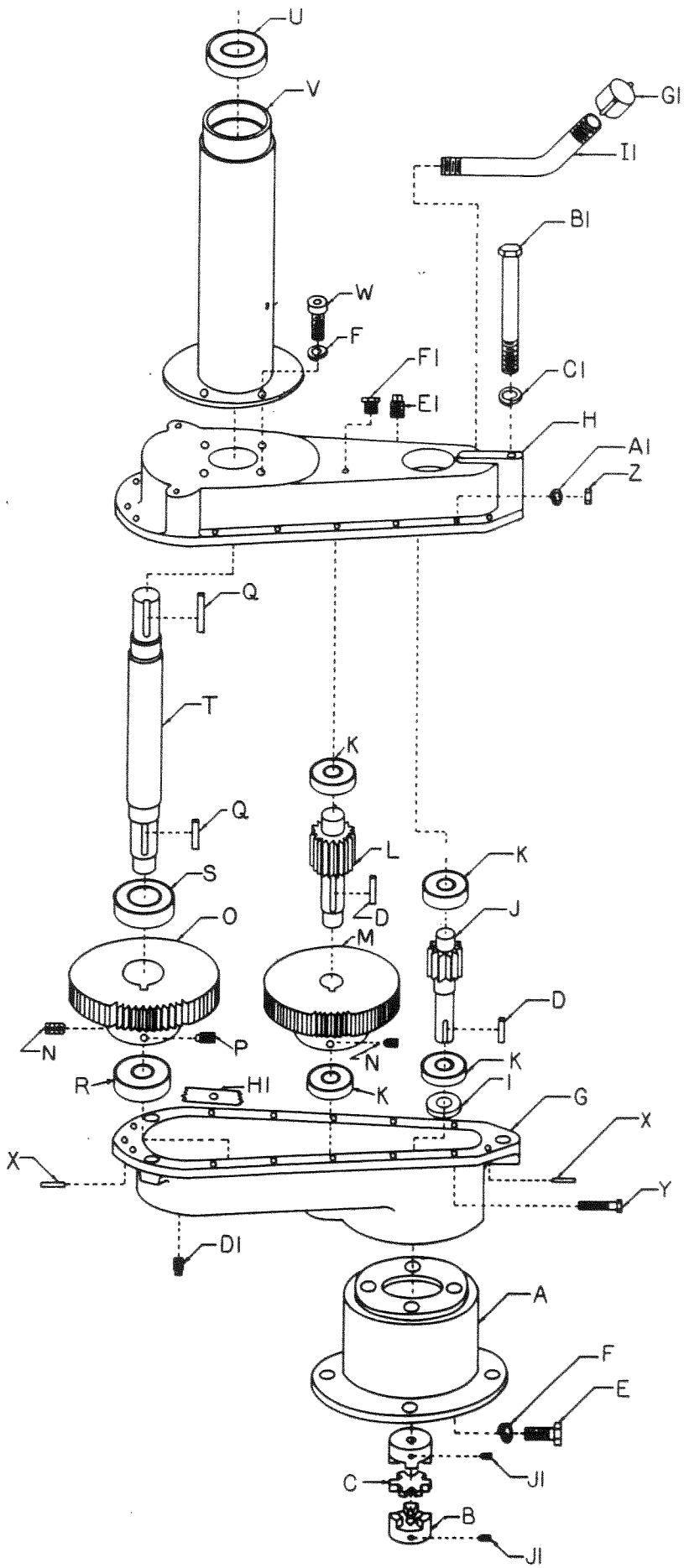

McENGLEVAN

SWIF-MUL

ML-125 Gear Box Assembly

			Qty
A	040051	Motor Adaptor Housing	1
B	040052	Universal Joint	1
C	040056	Universal Jt Rubber Insert	1
D	040053	3/16" Square Key	2
E	001205	3/8" x 1" Hex Head Screw	8
F	002122	3/8" Lock Washer	8
G	040061	Lower Half Gear Box	1
H	040062	Upper Half Gear Box	1
I	040063	Drive Pinion Seal	1
J	040064	Drive Pinion Gear	1
K	040065	Int. Pinion Bearing	4
L	040066	Intermediate Pinion	1
M	040067	Int. Pinion Spur Gear	1
N	001053	5/16" x 3/8" Socket Head Set Screw	2
O	040068	Drive Shaft Gear	1
P	001062	5/16" x 1/2" Dog Pt Screw	1
Q	040069	1/4" Square x 1" Key	3
R	040070	Drive Shaft Bottom Brg	1
S	040071	Drive Shaft Middle Brg	1
T	040250	Drive Shaft	1
U	040251	Drive Shaft Upper Brg	1
V	040252	Drive Shaft Housing	1
W	000902	5/16" x 5/8" Socket Head Cap Screw	4
X	040078	1/4" x 3/4" Dowel Pin	2
Y	000708	1/4" x 1" Hex Hd Screw	10
Z	002008	1/4" Hex Head Nut	10
A1	002112	1/4" Lock Washer	10
B1	001515	1/2" x 4" Hex Head Cap Screw	3
C1	002132	1/2" Lock Washer	3
D1	003323	3/8" Black Steel Plug	1
E1	003322	1/4" Black Steel Plug	1
F1	003460	1/8" Brass Air Vent	1
G1	003330	3/8" Fill Cap	1
H1	040079	Gear Box Gasket	2
I1	040260	Gear Box Fill Pipe	1
J1	000802	1/4" x 5/16" Socket Head Set Screw	2

McENGLEVAN

SWIF-MUL

ML-125 PORTO UNIT

			Qty
A	040751	Porto Unit Frame Assy	1
B	003511	10" Muller Wheel	2
C	001215	3/8" x 3 1/2" Hex Hd Screw	2
D	002126	7/16" Flat Washer	4
E	002122	3/8" Lock Washer	2
F	002121	3/8" Flat Washer	2
G	002015	3/8" Hex Nut	2
H	040760	Axle	2

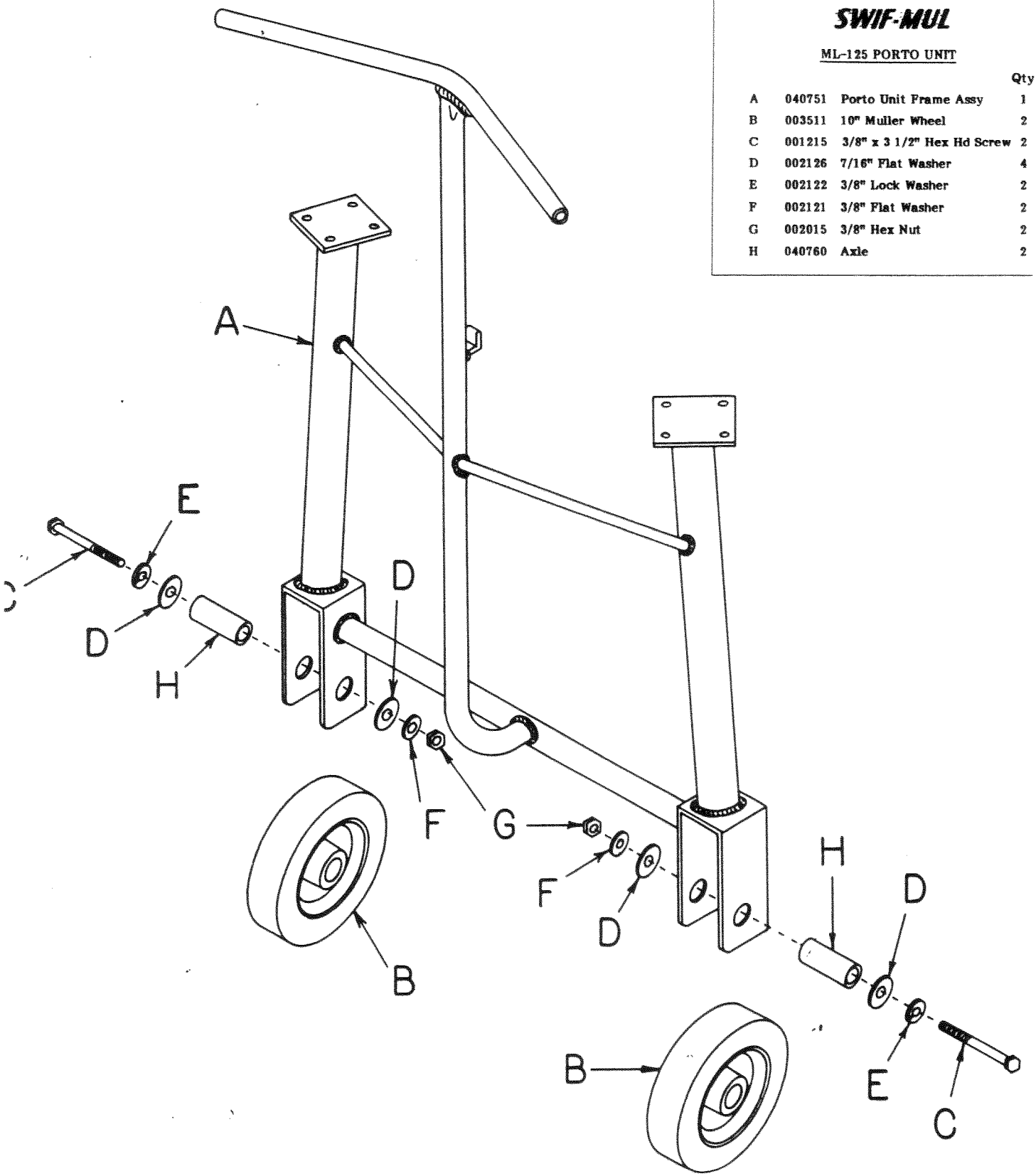

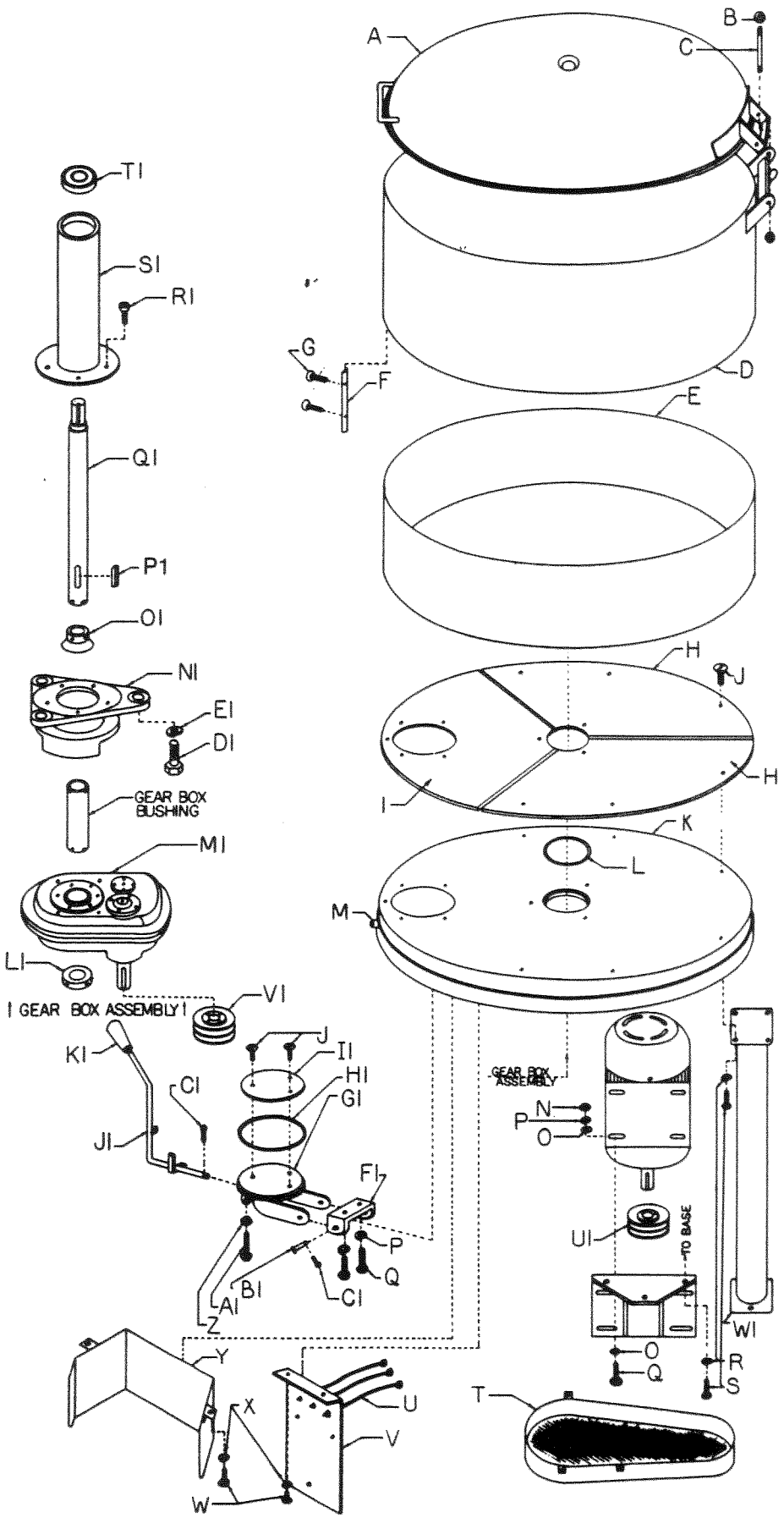

McENGLEVAN

SWIF-MUL

ML-250 BASE & TUB ASSEMBLY

			Qty
A	040480	Muller Lid Assembly	1
B	002023	1/2" Jam Nut	2
C	040484	1/2" Lid Hinge Pin	1
D	040477	Muller Shell Assembly	1
E	040478	Crib Lining AR	1
F	040281	Muller Ribs	8
G	000454	#10-24 1/2" Flat Head Machine Screw	16
H	040460	Base Wear Plate Solid Section	2
I	040461	Base Wear Plate W/Opening	1
J	000903	5/16" x 3/4" Flat Head Machine Screw	18
K	040459	Muller Cast Base	1
L	040472	1/8" x 3 1/2" 'O' Ring	1
M	001555	1/2" x 1" Socket Head Set Screw	1
N	002015	3/8" Hex Head Nut	4
O	002121	3/8" Flat Washer	4
P	002122	3/8" Lock Washer	6
Q	001207	3/8" x 1 1/2" Hex Hd Screw	1
R	002132	1/2" Lock Washer	15
S	001505	1/2" x 1 1/2" Hex Head Cap Screw	15
T	040499	Belt Guard	1
U	040456	Lubrication Assembly	1
V	040502	Control Mount Plate	1
W	000702	1/4" x 5/8" Hex Head Machine Screw	4
X	002112	1/4" Lock Washer	4
Y	040492	Dump Chute Assembly	1
Z	002012	5/16" Jam Nut	2
A1	000906	5/16" x 1 1/4" Hex Head Cap Screw	2
B1	040518	3/8" x 2" Door Hinge Pin	2
C1	040086	1/8" x 1" Cotter Pin	2
D1	001806	3/4" x 2 1/4" Hex Head Cap Screw	3
E1	002146	3/4" Lock Washer	3
F1	040466	Dump Door Bracket	1
G1	040462	Dump Door	1
H1	040471	9" OD x 7 1/4" ID Flat Seal	1
I1	040463	Dump Door Wear Plate AR	1
J1	040467	Dump Door Lever 5/8" x 26"	1
K1	040093	Dump Door Lever Handle	1
L1	040448	Set Collar #SC 1 3/4" BMC	1
M1	040438	Gear Box	1
N1	040468	Gear Box Mount Bracket	1
O1	040447	Sand Slinger Casting	1
P1	040517	Drive Shaft Key	1
Q1	040449	Drive Shaft	1
R1	001557	1/2" x 1 1/2" Hex Head Cap Screw	4
S1	040451	Drive Shaft Housing	1
T1	040450	Upper Drive Shaft Bearing (Fafnier GW210PP-3)	1
U1	040440	Motor Pulley #2AK49H	1
V1	040419	Gear Box Pulley	1
W1	040473	Muller Leg Assembly	3

ML-250 PLOW AND WHEEL HEAD ASSEMBLY

			Qty
A	040459	Muller Cast Base	1
B	040451	Drive Shaft Housing	1
C	040455	3/8" Sq x 2" Key	1
D	040449	Drive Shaft	1
E	040454	Drive Shaft Spacer	1
F	001380	3/8" x 1/2" Socket Head Set Screw	2
G	040413	1/2" x 4" Pivot Pin	1
H	040414	Rubber Boot Seal	2

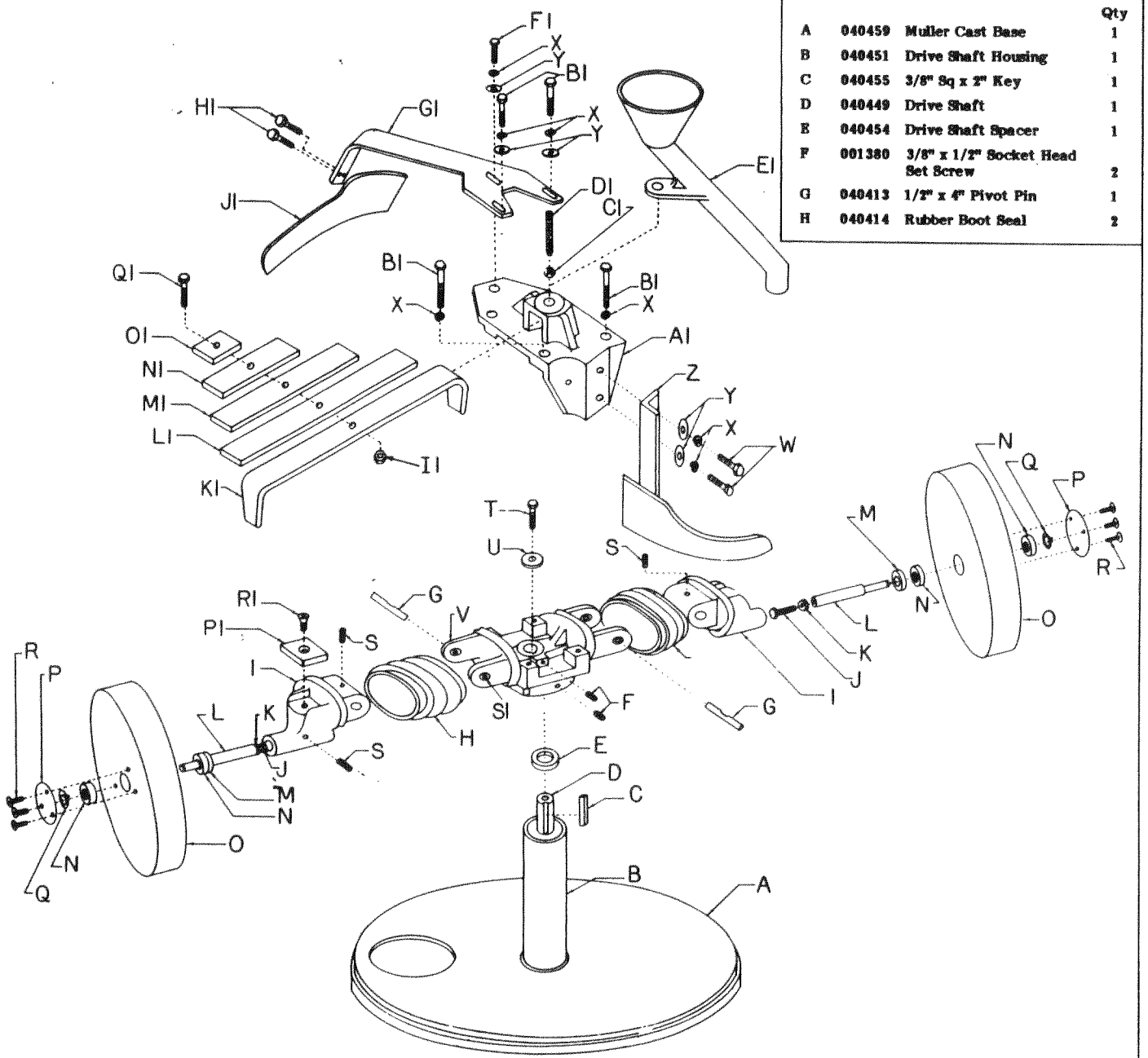

I	040412	Axle Casting	2
J	001208	3/8" x 1 3/4" Hex Hd Screw	2
K	002016	3/8" Jam Nut	2
L*	040415	Axle	2
M*	040419	Thomas Quad Seal	2
N*	040418	Wheel Bearing	4
O	040417	Muller Wheel	2
P	040420	Wheel Bearing Cap	2
Q*	040512	Wheel Retaining Ring	2
R	000453	#10-24 1/2" Self Tapping Screw	6
S	001053	5/16" x 3/8" Set Screw	4
T	001525	1/2" x 1 1/2" Fine Thread Hex Head Cap Screw	1
U	002131	1/2" Flat Washer	1
V	040411	Wheel Drive Casting	1
W	001455	7/16" x 1 1/2" Hex Hd Screw	2
X	002127	7/16" Lock Washer	7
Y	002126	7/16" Flat Washer	7
Z	040434	Inside Plow Assembly	1
A1	040421	Plow Drive Casting	1
B1	001461	7/16" x 3" Hex Head Cap Screw	4
C1	002023	1/2" Jam Nut	1
D1	001620	1/2" x 3" Sq Head Course Bolt	1
E1	040493	Water Funnel	1
F1	001457	7/16" x 1 1/4" Hex Hd Screw	1
G1	040432	Outside Plow Arm	1
H1	001205	3/8" x 1" Hex Hd Screw	2
I1*	002008	1/4" Hex Nut	1
J1	040430	Outside Plow Blade	1
K1*	040422	Curved Tension Spring Leaf	1
L1*	040426	13 1/2" Flat Spring Leaf	1
M1*	040425	10 1/2" Flat Spring Leaf	1
N1*	040424	7 1/2" Flat Spring Leaf	1
O1*	040423	4 1/2" Flat Spring Leaf	1
P1	040513	Spring Wear Pad	1
Q1*	000710	1/4" x 1 1/2" Hex Head Machine Screw	1
R1	000652	1/4" x 1/2" Flat Head Machine Screw	1
S1	040514	Axle Pivot Pin Bushing	4
*	040427	Tension Spring Leaf Assy (Includes I1, K1, L1, M1, N1, O1, Q1)	1
*	040429	Replacement Wheel Bearing Cartridge (Includes L, M, N, Q)	2

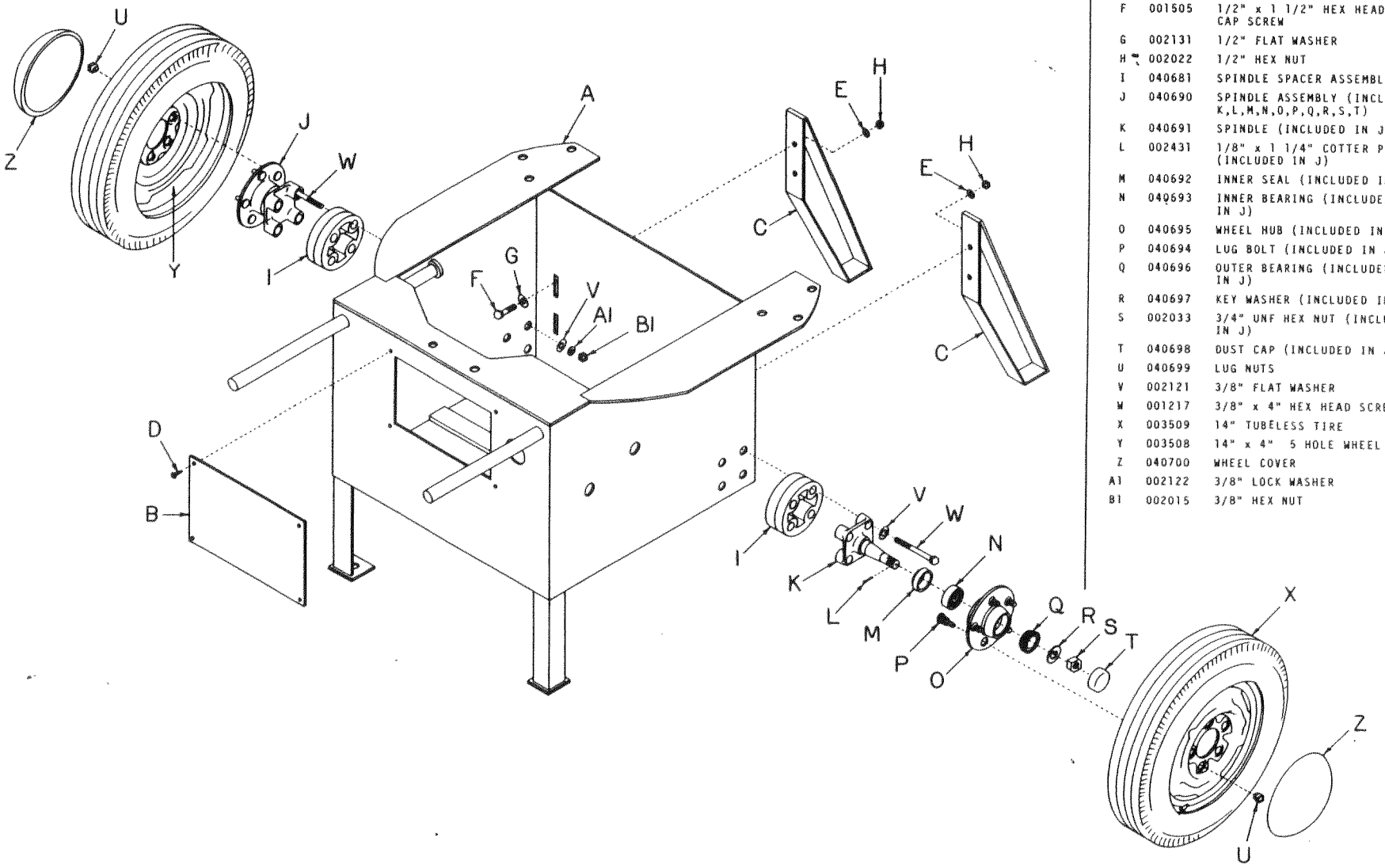

McENGLEVAN

SWIF-MUL

PM-250 PORTABLE MULLER

			QTY
A	040652	CARRIAGE BODY ASSY	1
B	040661	MOTOR ACCESS HOLE PLATE	1
C	040670	FRONT LEG ASSEMBLY	2
D	000523	#10-24 SELF TAPPING MACHINE SCREW	4
E	002132	1/2" LOCK WASHER	4
F	001505	1/2" x 1 1/2" HEX HEAD CAP SCREW	4
G	002131	1/2" FLAT WASHER	4
H	002022	1/2" HEX NUT	4
I	040681	SPINDLE SPACER ASSEMBLY	2
J	040690	SPINDLE ASSEMBLY (INCLUDES K,L,M,N,O,P,Q,R,S,T)	2
K	040691	SPINDLE (INCLUDED IN J)	2
L	002431	1/8" x 1 1/4" COTTER PIN (INCLUDED IN J)	2
M	040692	INNER SEAL (INCLUDED IN J)	2
N	040693	INNER BEARING (INCLUDED IN J)	2
O	040695	WHEEL HUB (INCLUDED IN J)	2
P	040694	LUG BOLT (INCLUDED IN J)	10
Q	040696	OUTER BEARING (INCLUDED IN J)	2
R	040697	KEY WASHER (INCLUDED IN J)	2
S	002033	3/4" UNF HEX NUT (INCLUDED IN J)	2
T	040698	DUST CAP (INCLUDED IN J)	2
U	040699	LUG NUTS	10
V	002121	3/8" FLAT WASHER	16
W	001217	3/8" x 4" HEX HEAD SCREW	8
X	003509	14" TUBELESS TIRE	2
Y	003508	14" x 4" 5 HOLE WHEEL	2
Z	040700	WHEEL COVER	2
A1	002122	3/8" LOCK WASHER	8
B1	002015	3/8" HEX NUT	8