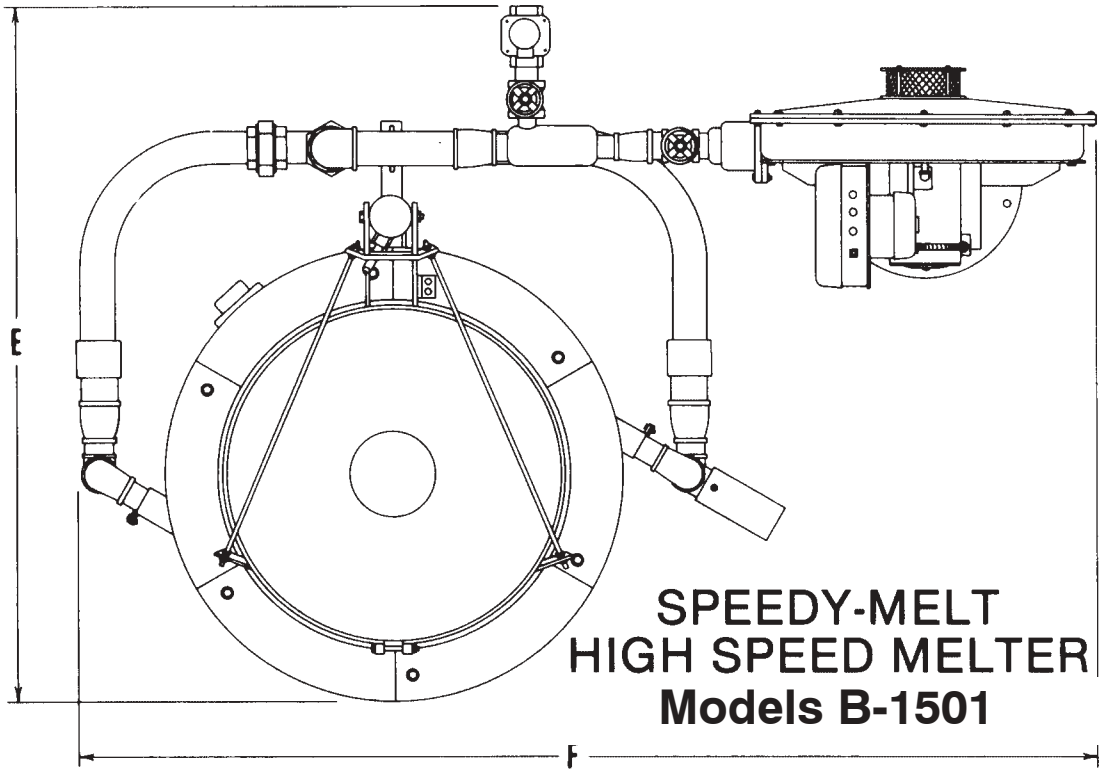

SPEEDY-MELT
HIGH SPEED MELTER
Models B-1501

	COMBUSTION CHAMBER		PIT TYPE INSTALLATION							
MODEL	DIA.	DEPTH	A	B	C	D	E	F	G	H
B-1501	21"	24"	38"	35"	51"	58"	57"	85"	59"	23"

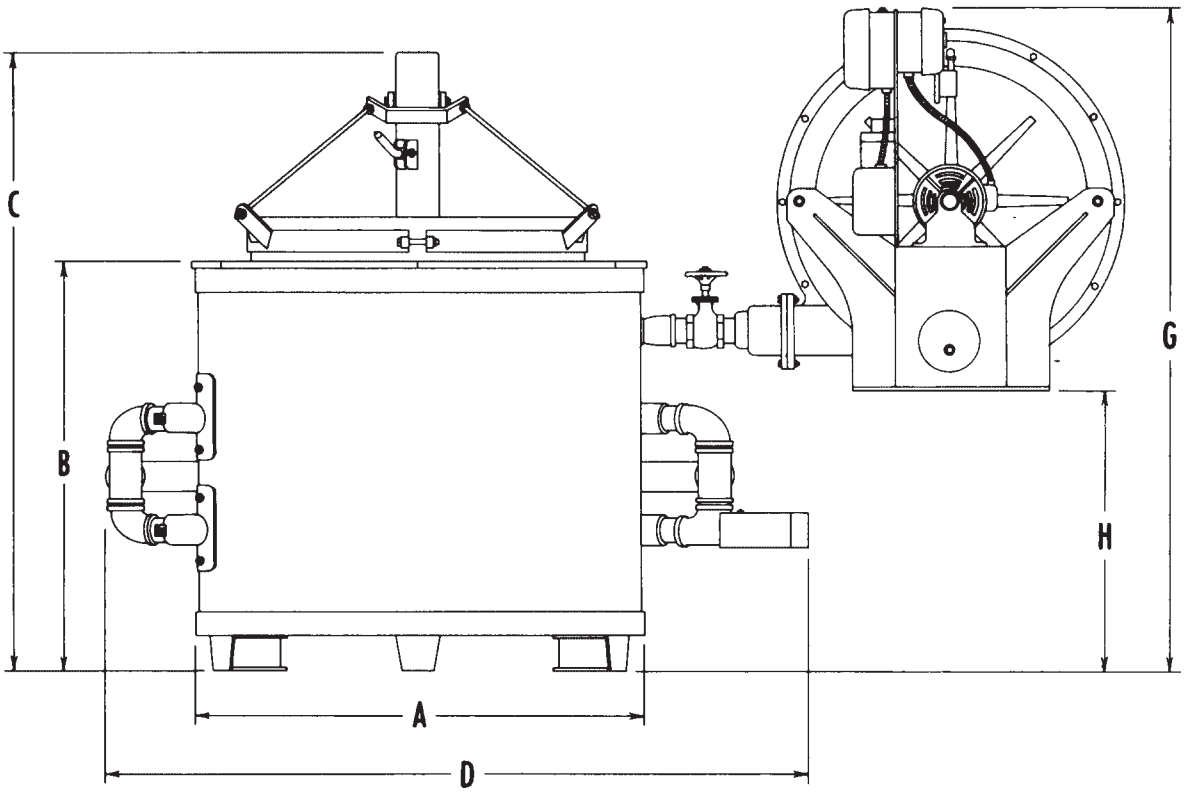

MIFCO
McEnglevan Industrial Furnace Company, Inc.

B-160

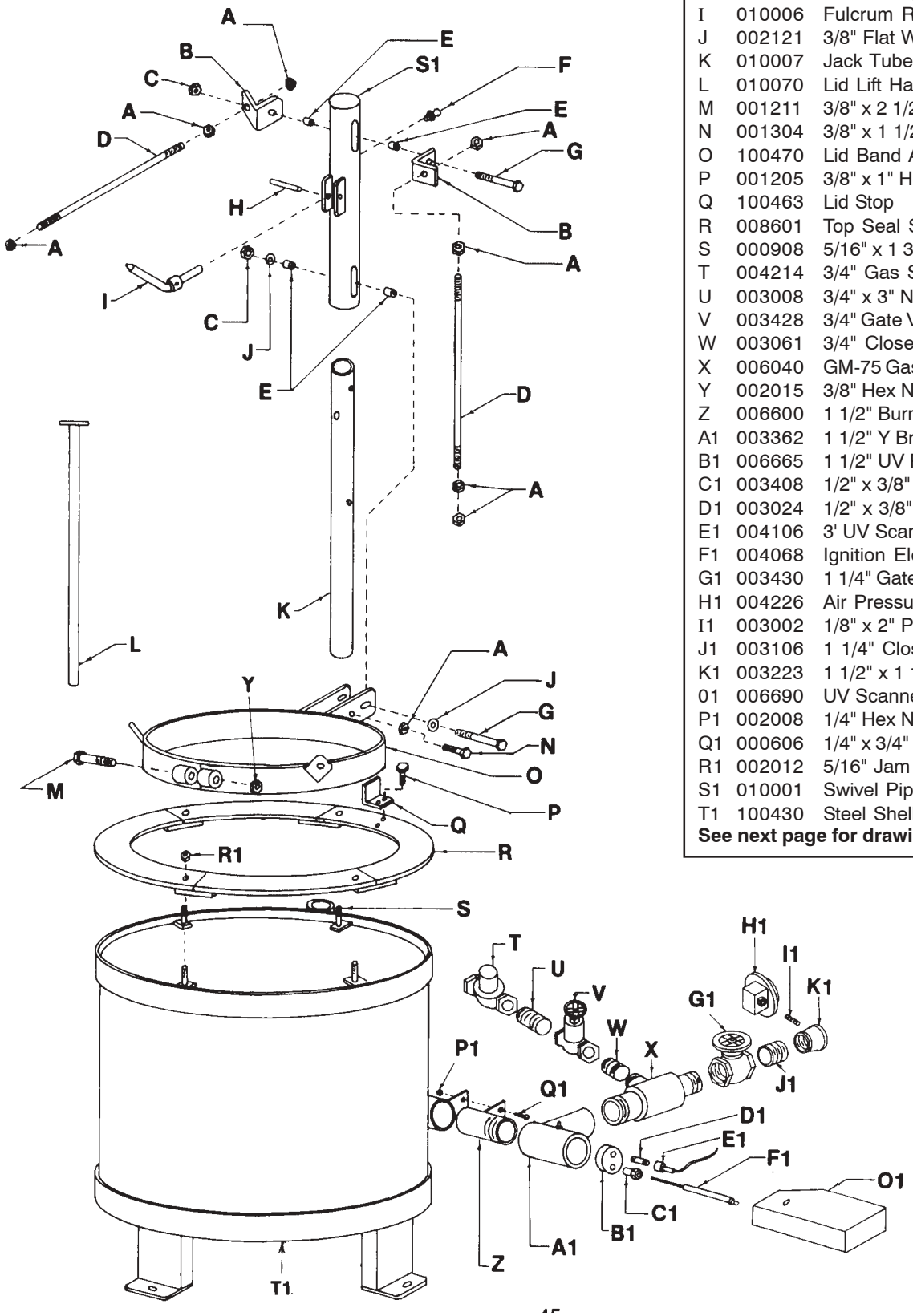

	OPN	DESCRIPTION	QTY
A	002016	3/8" Jam Nut	8
B	010008	Support Rod Bracket	2
C	002017	3/8" Hex Lock Nut	2
D	100475	Lid Support Rod	2
E	010009	Lid Lift Bushings	4
F	010005	Drive-In Grease Fitting	1
G	001215	3/8" x 3" Hex Head Bolt	2
H	002403	Fulcrum Spring Pin	1
I	010006	Fulcrum Rod	1
J	002121	3/8" Flat Washer	2
K	010007	Jack Tube	1
L	010070	Lid Lift Handle Assembly	1
M	001211	3/8" x 2 1/2" Hex Head Bolt	1
N	001304	3/8" x 1 1/2" Carriage Bolt	1
O	100470	Lid Band Assembly	1
P	001205	3/8" x 1" Hex Head Bolt	2
Q	100463	Lid Stop	1
R	008601	Top Seal Segment	4
S	000908	5/16" x 1 3/4" Hex Head Bolt	4
T	004214	3/4" Gas Solenoid	1
U	003008	3/4" x 3" Nipple	1
V	003428	3/4" Gate Valve	1
W	003061	3/4" Close Nipple	1
X	006040	GM-75 Gas/Air Mixer	1
Y	002015	3/8" Hex Nut	1
Z	006600	1 1/2" Burner Nozzle	1
A1	003362	1 1/2" Y Branch	1
B1	006665	1 1/2" UV Plug	1
C1	003408	1/2" x 3/8" Comp. Fitting	1
D1	003024	1/2" x 3/8" Reducing Nipple	1
E1	004106	3' UV Scanner	1
F1	004068	Ignition Electrode	1
G1	003430	1 1/4" Gate Valve	1
H1	004226	Air Pressure Switch	1
I1	003002	1/8" x 2" Pipe Nipple	1
J1	003106	1 1/4" Close Nipple	1
K1	003223	1 1/2" x 1 1/4" Reducing Cplr.	1
01	006690	UV Scanner Cover	1
P1	002008	1/4" Hex Nut	1
Q1	000606	1/4" x 3/4" RD HD MS	1
R1	002012	5/16" Jam Nut	4
S1	010001	Swivel Pipe	1
T1	100430	Steel Shell Assembly	1

See next page for drawing of B-160 Blower

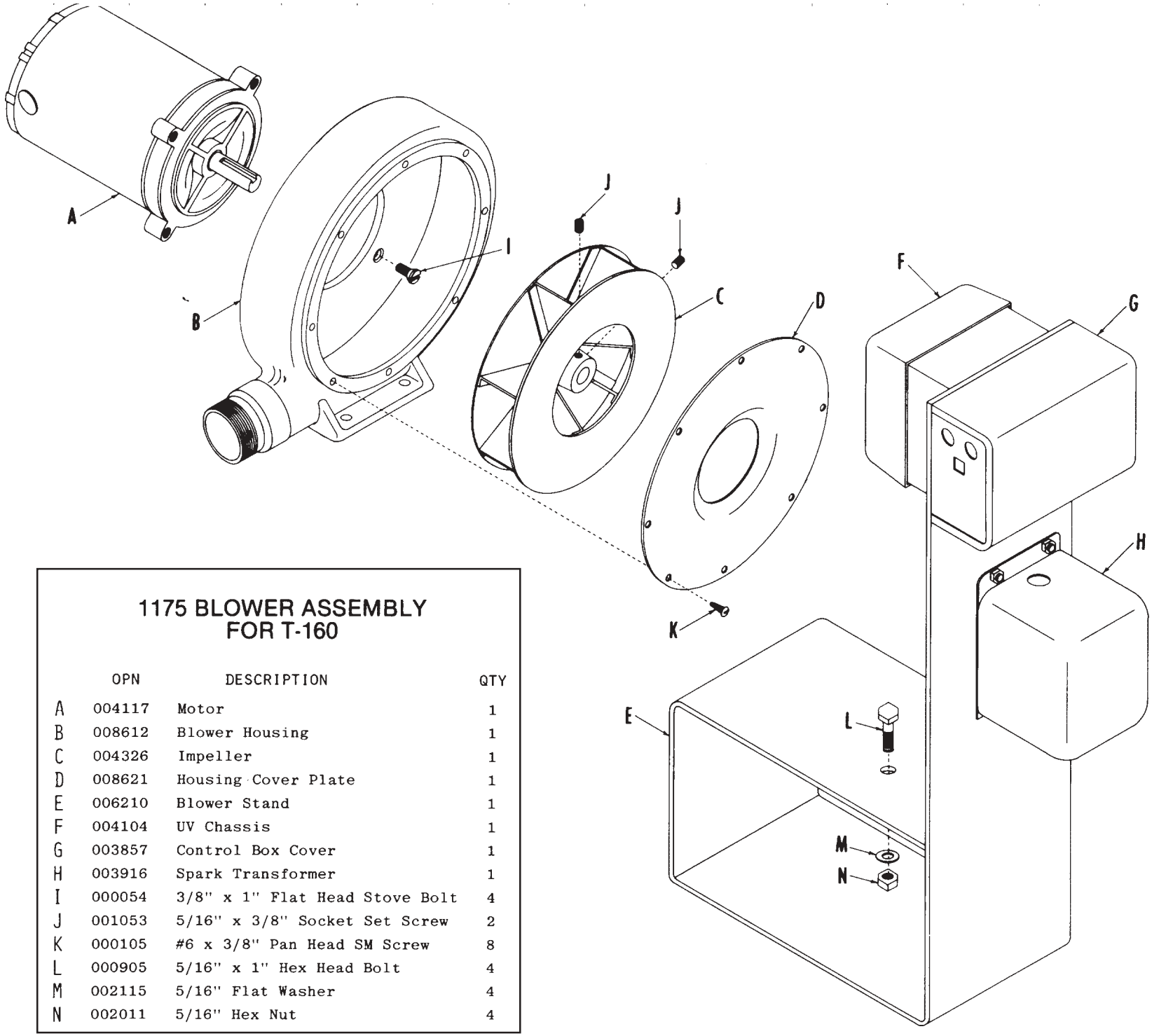

1175 BLOWER ASSEMBLY FOR T-160

	OPN	DESCRIPTION	QTY
A	004117	Motor	1
B	008612	Blower Housing	1
C	004326	Impeller	1
D	008621	Housing Cover Plate	1
E	006210	Blower Stand	1
F	004104	UV Chassis	1
G	003857	Control Box Cover	1
H	003916	Spark Transformer	1
I	000054	3/8" x 1" Flat Head Stove Bolt	4
J	001053	5/16" x 3/8" Socket Set Screw	2
K	000105	#6 x 3/8" Pan Head SM Screw	8
L	000905	5/16" x 1" Hex Head Bolt	4
M	002115	5/16" Flat Washer	4
N	002011	5/16" Hex Nut	4

MIFCO
McEnglevan Industrial Furnace Company, Inc.

B-301

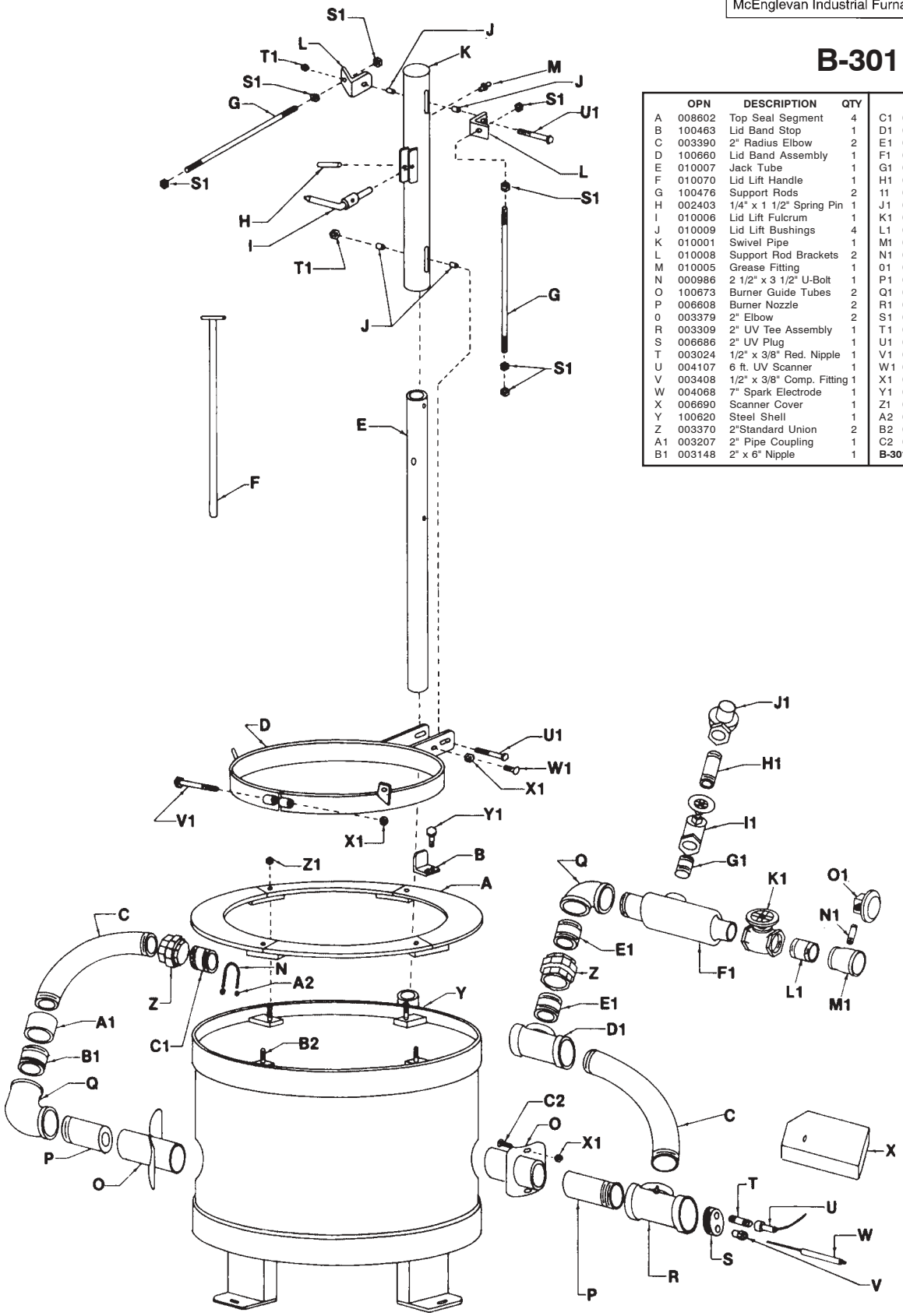

	OPN	DESCRIPTION	QTY		OPN	DESCRIPTION	QTY
A	008602	Top Seal Segment	4	C1	003142	2" x 3" Nipple	1
B	100463	Lid Band Stop	1	D1	003311	2" Tee	1
C	003390	2" Radius Elbow	2	E1	003140	2" Close Nipple	2
D	100660	Lid Band Assembly	1	F1	006060	GM-100 Gas/Air Mixer	1
E	010007	Jack Tube	1	G1	003085	1" Close Nipple	1
F	010070	Lid Lift Handle	1	H1	003088	1" x 3" Nipple	1
G	100476	Support Rods	2	11	003429	1" Gate Valve	1
H	002403	1/4" x 1 1/2" Spring Pin	1	J1	004215	1" Gas Solenoid	1
I	010006	Lid Lift Fulcrum	1	K1	003431	1 1/2" Gate Valve	1
J	010009	Lid Lift Bushings	4	L1	003121	1 1/2" Close Nipple	1
K	010001	Swivel Pipe	1	M1	003224	2" x 1 1/2" Reducing Cpl	1
L	010008	Support Rod Brackets	2	N1	003002	1/8" x 2" Pipe Nipple	1
M	010005	Grease Fitting	1	01	004226	Air Pressure Switch	1
N	000986	2 1/2" x 3 1/2" U-Bolt	1	P1	004136	OBSOLETE	1
O	100673	Burner Guide Tubes	2	Q1	000435	OBSOLETE	4
P	006608	Burner Nozzle	2	R1	006200	OBSOLETE	1
0	003379	2" Elbow	2	S1	002016	3/8" Hex Jam Nut	8
R	003309	2" UV Tee Assembly	1	T1	002017	3/8" Hex Lock Nut	2
S	006686	2" UV Plug	1	U1	001213	3/8" x 3" Hex HD Bolt	2
T	003024	1/2" x 3/8" Red. Nipple	1	V1	001211	3/8" x 2 1/2" Hex Bolt	1
U	004107	6 ft. UV Scanner	1	W1	001304	3/8" x 1 1/2" Carriage B.	1
V	003408	1/2" x 3/8" Comp. Fitting	1	X1	002015	3/8" Hex Nut	1
W	004068	7" Spark Electrode	1	Y1	001205	3/8" x 1" Hex HD Bolt	2
X	006690	Scanner Cover	1	Z1	002012	5/16" Hex Jam Nut	4
Y	100620	Steel Shell	1	A2	002011	5/16" Hex Nut	2
Z	003370	2"Standard Union	2	B2	000908	5/16" x 1 3/4" Hex Bolt	4
A1	003207	2" Pipe Coupling	1	C2	001302	3/8" x 1" Carriage Bolt	4
B1	003148	2" x 6" Nipple	1	**B-301 uses #1610 Blower on next page.**			

McENGLEVAN
Parts List
B-301

	OPN	DESCRIPTION	QTY
A	008602	Top Seal Segment	4
B	100463	Lid Band Stop	1
C	003390	2" Long Radius Elbow	2
D	100660	Lid Band Assembly	1
E	010007	Jack Tube	1
F	010070	Lid Lift Handle	1
G	100476	Support Rods	2
H	002403	1/4" X 1 1/2" Spring Pin	1
I	010006	Lid Lift Fulcrum	1
J	010009	Lid Lift Bushings	4
K	010001	Swivel Pipe	1
L	010008	Support Rod Brackets	2
M	010005	Drive In Grease Fitting	1
N	000986	5/16"x2 1 /2"x3 1 /2" U-Bolt	1
O	100673	Burner Guide Tube	2
P	006608	Burner Nozzle	2
Q	003379	2" Elbow	2
R	003309	2" UV Tee Assembly	1
S	006686	2" UV Plug	1
T	003024	1/2" x 3/8" Reducing Npl	1
U	004107	6 ft. UV Scanner	1
V	003408	1/2" x 3/8" Comp. Fitting	1
W	004068	7" Ignition Electrode	1
X	006690	UV Scanner Cover	1
Y	100620	Steel Shell Assembly	1
Z	003370	2" Standard Union	2
A1	003207	2" Pipe Coupling	1
B1	003148	2" x 6" Nipple	1
C1	003142	2" x 3" Nipple	1
D1	003311	2" Tee	1
E1	003140	2" Close Nipple	2
F1	006060	GM-100 Gas/Air Mixer	1
G 1	003085	1" Close Nipple	1
H1	003088	1" x 3" Nipple	1
I1	003429	1" Gate Valve	1
J1	004215	1" - 120v Solenoid Valve	1
K1	003431	1 1 /2" Gate Valve	1
L1	003121	1 1/2" Close Nipple	1
M 1	003224	2" x 1 1/2" Reducing Cpl.	1
N1	003002	1/8" x 2" Nipple	1
O1	004226	Air Pressure Switch	1
Q 1	000435	10-24 x 1 /2" Truss Hd MS	4
R1	006200	Blower Stand	1
S1	002016	3/8" Hex Jam Nut	8
T1	002017	3/8" Hex Lock Nut	2
U1	001213	3/8" x 3" Hex Head Bolt	2
V1	001211	3/8" x 2 1 /2" Hex Hd Bolt	1
W1	001304	3/8" x 1 1/2" Carriage Bolt	1
X1	002015	3/8" Hex Nut	4
Y1	001205	3/8" x 1" Hex Head Bolt	2
Z1	002012	5/16" Hex Jam Nut	4
A2	002011	5/16" Hex Nut	2
B2	000908	5/16" x 1 3/4" Hex Bolt	4
C2	001302	3/8" x 1" Carriage Bolt	4

1610 BLOWER ASSEMBLY for B-301

	OPN	DESCRIPTION	QTY		OPN	DESCRIPTION	QTY
A	102801	Intake Guard	1	M	000710	1/4" x 1 1/2" Hex Bolt	8
B	102802	Intake Screen	1	N	002112	1/4" Lock Washers	8
C	008615	Blower Cover	1	O	002008	1/4" Hex Nut	8
D	004175	Impeller Assembly	1	P	002015	3/8" Hex Nut	4
E	008187	Foam Insulation Strip	1	Q	002122	318" Lock Washers	4
F	008614	Blower Housing	1	R	002121	3/8" Flat Washers	8
G	----------	1 HP - 360ORPM Motor	1	S	001210	318" x 2 1/4" Hex Bolt	4
H	006230	Blower Stand	1	T	000905	5/16" x 1" Hex Bolt	4
I	----------	Foam Insulation (E)	1	U	002115	5/16" Flat Washers	8
J	008616	Outlet Casting	1	V	002011	5/16" Hex Nut	4
K	000614	1/4" x 2 1/4" RD HD MS	4	W	002132	1/2" Lock Washer	3
L	002111	1/4" Flat Washers	4	X	001503	1/2" x 1" Hex Bolt	3
				Y	002131	1/2" Flat Washers	3

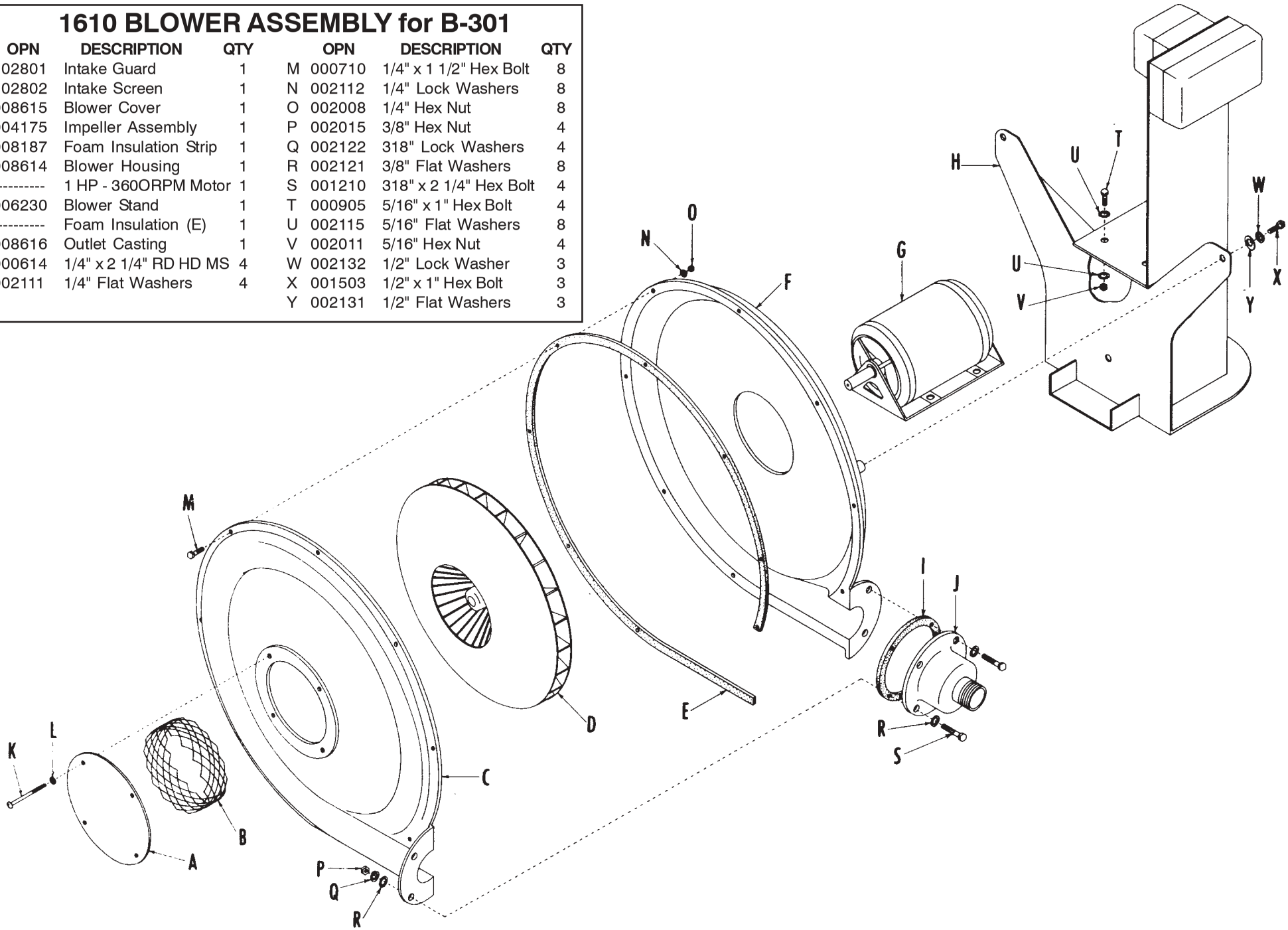

B-702

	OPN	DESCRIPTION	QTY
A	100815	Shell Assembly	1
B	008603	Top Seal Segment	6
C	100875	Lid Band Assembly	1
D	102044	Lid Band Stop	1
E	010066	Jack Tube	1
F	010068	Lid Lift Handle	1
G	100874	Support Rods	2
H	100950	Support Rod Bracket	1
I	010063	Swivel Pipe	1
J	010065	Fulcrum Rod	1
K	006200	Obsolete	
L	Blower	See Next Page	
M	004226	Air Pressure Switch	1
N	006070	GM-125 Mixer	1
O	100835	Burner Guide Tube	2
P	003309	2" UV Tee Assembly	1
Q	006686	2" UV Plug	1
R	006690	UV Scanner Cover	1
S	003024	1/2" x 3/8" Red. Cpl.	1
T	004107	6ft. UV Scanner	1
U	003408	1/2" x 3/8" Comp. Fitting	1
V	004068	7" Spark Electrode	1
W	004216	1 1/4" Gas Solenoid	1
X	010009	Lid Lift Bushings	4
Y	002017	3/8" Hex Lock Nut	4
Z	002023	1/2" Jam Nut	8
A1	001217	3/8" x 4" Hex Bolt	2
B1	001215	3/8" x 3 1/2" Hex Bolt	1
C1	001306	3/8" x 2" Carriage Bolt	1
D1	002015	3/8" Hex Nut	5
E1	001205	3/8" x 1" Hex Bolt	2
F1	002012	5/16" Jam Nut	6
G1	002011	5/16" Hex Nut	2
H1	000986	5/16" x 2 1/2" U-Bolt	1
I1	003143	2 x 3 1/2" Nipple	1
J1	003370	2" Standard Union	2
K1	003390	2" Long Radius Elbow	2
L1	003207	2" Pipe Coupling	1
M1	100876	2" x 12" Nipple	1
N1	003379	2"90,Elbow	2
01	006610	2" Burner Nozzle	2
P1	001304	3/8" x 1 1/2" Carriage B.	4
Q1	003311	2" Tee	1
R1	003140	2" Close Nipple	2
S1	003430	1 1/4" Gate Valve	1
T1	003109	1 1/4" x 3" Nipple	1
U1	003431	1 1/2" Gate Valve	1
V1	003002	1/8" x 2" Nipple	1
W1	003121	1 1/4" Close Nipple	1
X1	003224	2" x 1 1/2" Red. Coupl.	1
Y1	000435	OBSOLETE	
Z1	010005	Grease Fittings	2
A2	000908	5/16" x 1 3/4" Hex Bolt	6
B2	001208	3/8" x 1 3/4" Hex Bolt	1

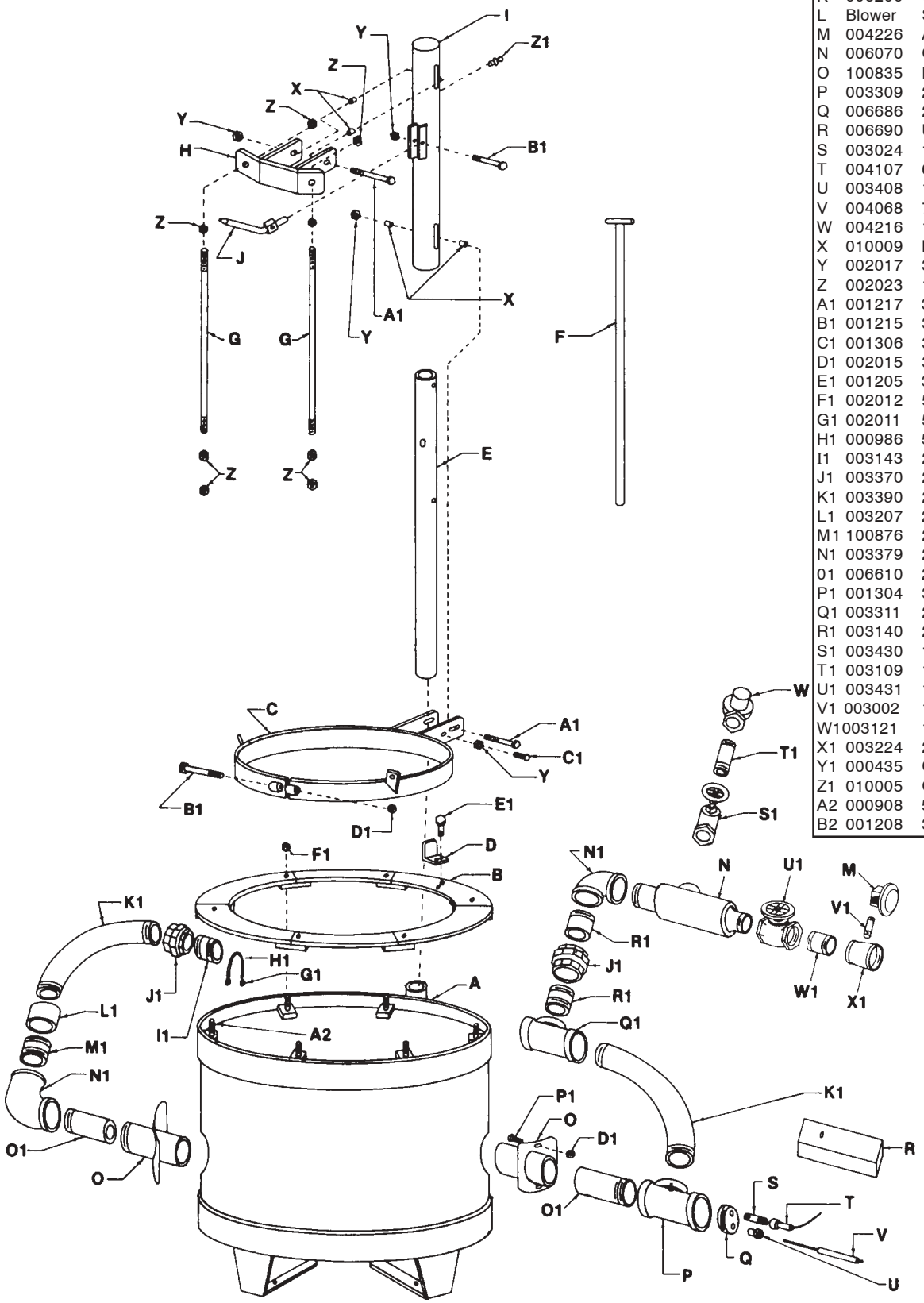

McENGLEVAN
Parts List
B-702

	OPN	DESCRIPTION	QTY
A	100815	Shell Assembly	1
B	008603	Top Seal Segment	6
C	100875	Lid Band Assembly	1
D	102044	Lid Band Stop	1
E	010066	Jack Tube	1
F	010068	Lid Lift Handle	1
G	100874	Support Rods	2
H	100950	Support Rod Bracket	1
I	010063	Swivel Pipe	1
J	010065	Fulcrum Rod	1
K	006200	Blower Stand	1
M	004226	Air Pressure Switch	1
N	006070	GM-125 Gas/Air Mixer	1
O	100835	Burner Guide Tube	2
P	003309	2" UV Tee Assembly	1
Q	006686	2" UV Plug	1
R	006690	UV Scanner Cover	1
S	003024	1/2" x 3/8" Reducing Cpl	1
T	004107	6 ft. UV Scanner	1
U	003408	1/2" x 3/8" Comp. Fitting	1
V	004068	7" Ignition Electrode	1
W	004216	1 1/4" Gas Solenoid Valve	1
X	010009	Lid Lift Bushings	4
Y	002017	3/8" Hex Lock Nut	4
Z	002023	1/2" Jam Nut	8
A1	001217	3/8" x 4" Hex Head Bolt	2
B1	001215	3/8" x 3 1/2" Hex Hd Bolt	1

	OPN	DESCRIPTION	QTY
C1	001306	3/8" x 2" Carriage Bolt	1
D1	002015	3/8" Hex Nut	5
E1	001205	3/8" x 1" Hex Head Bolt	2
F1	002012	5/16" Jam Nut	6
G1	002011	5/16" Hex Nut	2
H1	000986	5/16" x 2 1 /2" U-Bolt	1
I1	003143	2" x 3 1/2" Nipple	1
J1	003370	2" Standard Union	2
K1	003390	2" Long Radius Elbow	2
L1	003207	2" Pipe Coupling	1
M1	100876	2" x 12" Nipple	1
N1	003379	2" 900 Elbow	2
01	006610	2" Burner Nozzle	2
P1	001304	3/8" x 1 1/2" Carriage Bolt	4
Q1	003311	2"Tee	1
R1	003140	2" Close Nipple	2
S1	003430	1 1/4" Gate Valve	1
T1	003109	1 1/4" x 3" Nipple	1
U1	003431	1 1/2" Gate Valve	1
V1	003002	1/8" x 2" Nipple	1
W1	003121	1 1/4" Close Nipple	1
X1	003224	2" x 1 1/2" Reducing Cpl	1
Y1	000435	10-24 x 1/2" Truss Hd MS	4
Z1	010005	Drive-In Grease Fittings	2
A2	000908	5/16" x 1 3/4" Hex Hd Bolt	6
B2	001208	3/8" x 1 3/4" Hex Hd Bolt	1

* B-702 uses #1911 Blower instead of A1XM in above parts list.
See blower assemblies for B-700, B-701 and B-702 blower parts.

1911 BLOWER ASSEMBLY for B-702

OPN	DESCRIPTION		QTY	OPN	DESCRIPTION	QTY
A	102801	Intake Guard	1	M	000710	1/4" x 1 1/2" Hex Bolt	8
B	102802	Intake Screen	1	N	002112	1/4" Lock Washers	8
C	008615	Blower Cover	1	O	002008	1/4" Hex Nut	8
D	004176	Impeller Assembly	1	P	002015	3/8" Hex Nut	4
E	008187	Foam Insulation Strip	1	Q	002122	318" Lock Washers	4
F	008614	Blower Housing	1	R	002121	3/8" Flat Washers	8
G	----------	1 HP - 360ORPM Motor	1	S	001210	318" x 2 1/4" Hex Bolt	4
H	006230	Blower Stand	1	T	000905	5/16" x 1" Hex Bolt	4
I	----------	Foam Insulation (E)	1	U	002115	5/16" Flat Washers	8
J	008616	Outlet Casting	1	V	002011	5/16" Hex Nut	4
K	000614	1/4" x 2 1/4" RD HD MS	4	W	002132	1/2" Lock Washer	3
L	002111	1/4" Flat Washers	4	X	001503	1/2" x 1" Hex Bolt	3
				Y	002131	1/2" Flat Washers	3

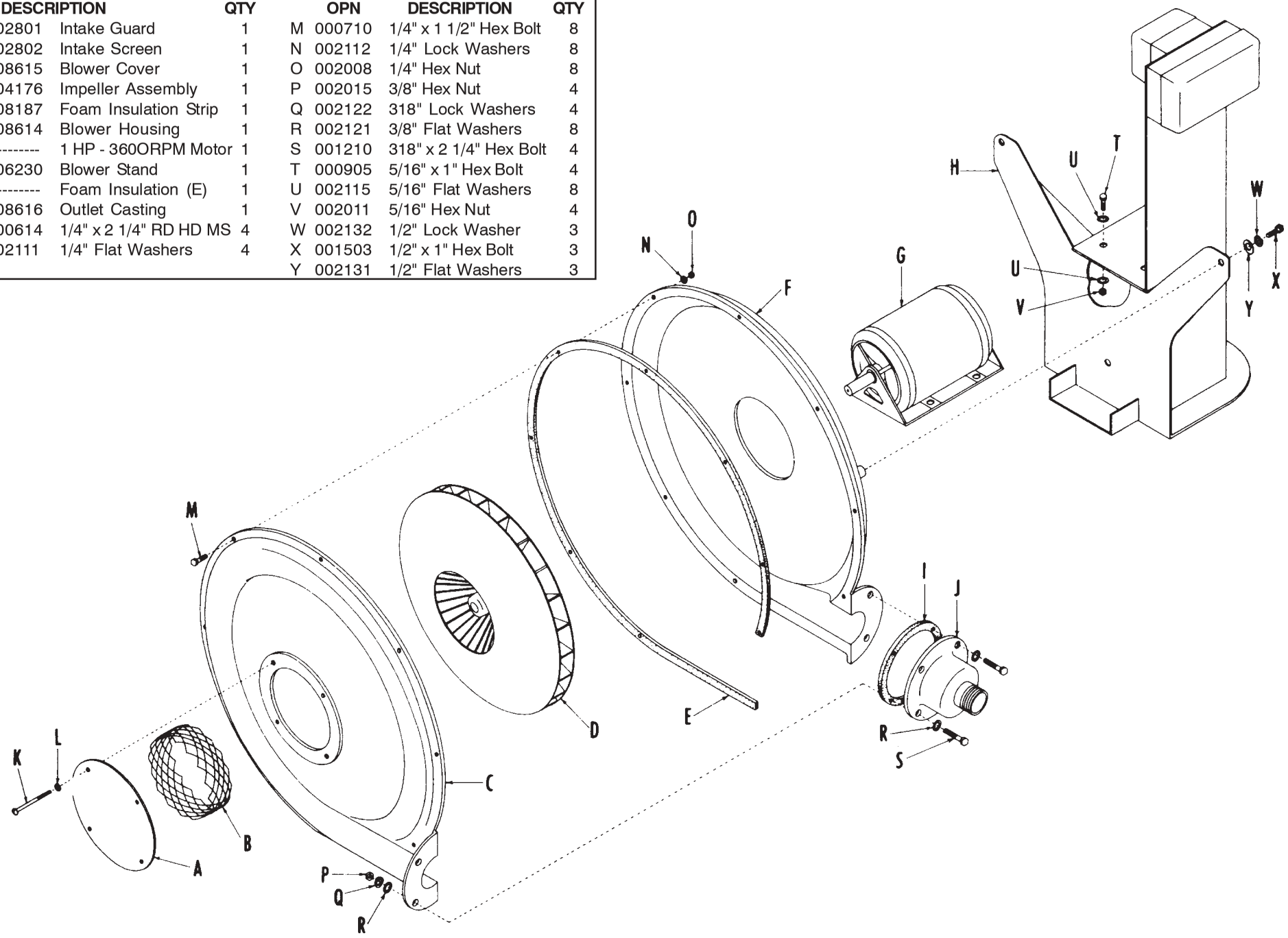

OPN	DESCRIPTION	QTY
A 101093	Bearing Spacer	4
B 101081	Swivel Pipe	1
C 002491	Ball Bearing	5
D 002023	1/2" Jam Nut	8
E 001208	3/8" x 1 3/4" Hex Bolt	1
F 002024	1/2" Hex Lock Nut	2
G 001517	1/2" x 5" Hex Bolt	2
H 010005	Grease Fitting	2
I 002423	Fulcrum Spring Pin	1
J 101087	Hand Fulcrum	1
K 102586	Support Rods	2
L 001215	3/8" x 3 1/2" Hex Bolt	1
M 002015	3/8" Hex Nut	10
N 101064	Lid Band	1
O 001205	3/8" x 1" Hex Bolt	2
P 101052	Lid Band Stop	1
Q 101095	Jack Tube	1
R 010068	Lid Lift Handle	1
S 101070	Top Seal Segment	6
T 002016	3/8" Jam Nut	6

OPN	DESCRIPTION	QTY
U 002121	3/8" Flat Washer	8
V 001302	3/8" x 1" Carriage Bolt	8
W 003159	2" Butt Nipple	4
X 006611	Burner Nozzle	4
Y 003385	1 1/2" x 2" 90∞ Elbow	3
Z 101035	Burner Guide Tube	4
A1 003311	2" Tee	2
B1 000606	1/4" x 3/4" RD HD MS	4
C1 002008	1/4" Hex Nut	5
D1 003140	2" Close Nipple	2
E1 003230	2" x 2 1/2" Red. Cpling	3
F1 003114	2 1/2" x 4" Nipple	1
G1 003115	2 1/2" x 4 1/2" Nipple	1
H1 003208	2 1/2" Coupling	2
I1 003795	2 1/2" Long Radius Elbow	2
J1 003368	2 1/2" Standard Union	2
K1 003116	2 1/2" x 8" Nipple	1
L1 003120	2 1/2" Close Nipple	3
M1 003118	2 1/2" Tee	1
N1 003407	2 1/2" 90∞ Elbow	1

OPN	DESCRIPTION	QTY
01 003161	2 1/2" x 10" Nipple	1
P1 003394	2" 45∞ Elbow	1
Q1 006070	GM-125 Gas/Air Mixer	1
R1 003430	1 1/4" Gate Valve	1
S1 003109	1 1/4" x 3" Nipple	1
T1 004216	1 1/4" Gas Solenoid	1
U1 003224	1 1/2" x 2" Red. Cpling	1
V1 003432	2" Gate Valve	1
W1 004226	Air Pressure Switch	1
X1 400429	Blower Assembly #1911	1
Y1 101153	UV Scanner Cover	1
Z1 003293	1 1/2" x 1 1/2" x 2" Tee	1
A2 006665	1 1/2" UV Plug	1
B2 003024	1/2" x 3/8" Reducing Npl	1
C2 003408	1/2" x 3/8" Comp. Fitting	1
D2 004068	7" Ignition Electrode	1
E2 004107	UV Scanner	1
F2 001209	3/8" x 2" Hex Bolt	6
G2 101090	Support Rod Bracket	1
H2 002131	1/2" Flat Washer	5
I2 101031	Steel Shell Assembly	1

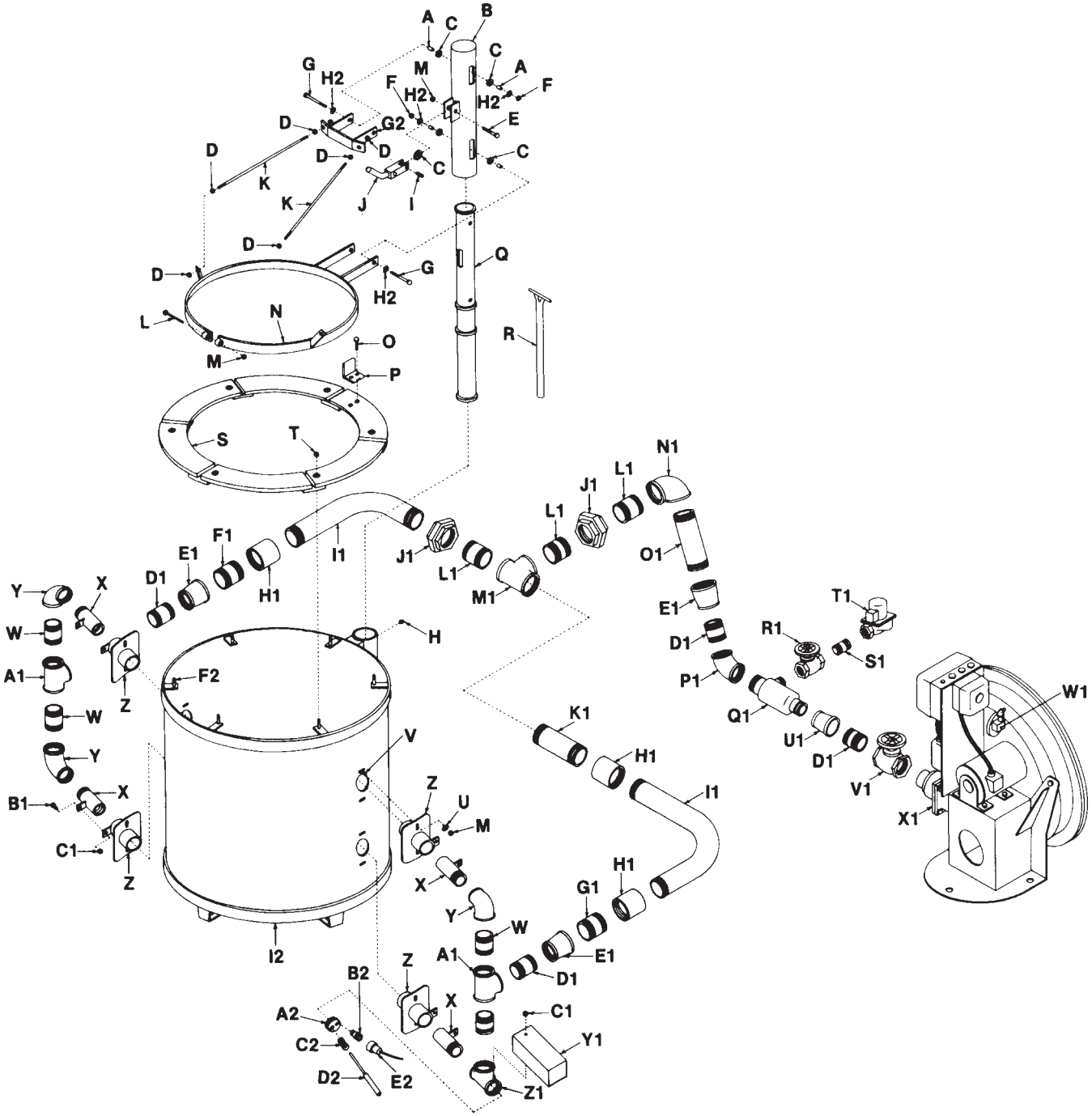

McENGLEVAN
Parts List
B-1501

	OPN	DESCRIPTION	QTY
A	101093	Bearing Spacer	4
B	101081	Swivel Pipe	1
C	002491	Ball Bearing	5
D	002023	1/2" Jam Nut	8
E	001208	3/8" x 1 3/4" Hex Hd Bolt	1
F	002024	1/2" Hex Lock Nut	2
G	001517	1/2" x 5" Hex Head Bolt	2
H	010005	Drive In Grease Fitting	2
I	002423	Fulcrum Spring Pin	1
J	101087'	Handle Fulcrum	1
K	102586	Support Rods	2
L	001215	3/8" x 3 1/2" Hex Hd Bolt	1
M	002015	3/8" Hex Nut	10
N	101064	Lid Band	1
O	001205	3/8" x 1" Hex Head Bolt	2
P	101052	Lid Band Stop	1
Q	101095	Jack Tube	1
R	010068	Lid Lift Handle	1
S	101070	Top Seal Segment	6
T	002016	3/8" Jam Nut	6
U	002121	3/8" Flat Washer	8
V	001302	3/8" x 1" Carriage Bolt	8
W	003159	2" Butt Nipple	4
X	006611	Burner Nozzle	4
Y	003385	1 1/2" x 2" Elbow	3
Z	101035	Burner Guide Tube	4
A1	003311	2"Tee	2
B1	000606	1/4" x 3/4" RHMS	4
C1	002008	1/4" Hex Nut	5
D1	003140	2" Close Nipple	4
E1	003230	2 1/2" x 2" Reducing Cpl	3

	OPN	DESCRIPTION	QTY
F1	003114	2 1/2" x 4" Nipple	1
G1	003115	2 1/2" x 4 1/2" Nipple	1
H1	003208	2 1 /2" Coupling	2
I1	003795	2 1/2" Long Radius Elbow	2
J1	003368	2 1/2" Standard Union	2
K1	003116	2 1/2" x 8" Nipple	1
L1	003120	2 1/2" Close Nipple	3
M1	003118	2 1/2" Tee	1
N1	003407	2 1/2" Elbow	1
01	003161	2 1/2" x 10" Nipple	1
P1	003394	2" 450 Elbow	1
Q1	006070	GM-125 Gas/Air Mixer	1
R1	003430	1 1/4" Gate Valve	1
S1	003109	1 1/4" x 3" Nipple	1
T1	004216	1 1/4" Gas Solenoid Valve	1
U1	003224	2" x 1 1/2" Reducing Cpl	1
V1	003432	2" Gate Valve	1
W1	004226	Air Pressure Switch	1
X1	400429	Blower Assembly #1912	1
Y1	101153	UV Scanner Cover	1
Z1	003293	1 1/2"x1 1/2"x2" UV Tee	1
A2	006665	1 1/2" UV Plug	1
B2	003024	1/2" x 3/8" Reducing Npl	1
C2	003408	1/2" x 3/8" Comp. Fitting	1
D2	004068	Ignition Electrode	1
E2	004107	UV Scanner	1
F2	001209	3/8" x 2" Hex Head Bolt	6
G2	101090	Support Rod Bracket	1
H2	002131	1/2" Flat Washer	5
12	101031	Steel Shell Assembly	1

1912 BLOWER ASSEMBLY for B-1501

OPN	DESCRIPTION		QTY	OPN	DESCRIPTION	QTY
A	102801	Intake Guard	1	M	000710	1/4" x 1 1/2" Hex Bolt	8
B	102802	Intake Screen	1	N	002008	1/4" Hex Nut	8
C	008609	Blower Cover	1	O	002015	3/8" Hex Nut	4
D	004176	Impeller Assembly	1	P	002122	3/8" Lock Washers	4
E	008187	Foam Insulation Strip	1	Q	002121	3/8" Flat Washers	8
F	008610	Blower Housing	1	R	001210	3/8" x 2 1/4" Hex Bolt	4
G	----------	1 HP - 360ORPM Motor	1	S	000905	5/16" x 1" Hex Bolt	4
H	006230	Blower Stand	1	T	002115	5/16" Flat Washers	8
I	----------	Foam Insulation (E)	1	U	002011	5/16" Hex Nut	8
J	008611	Outlet Casting	1	V	002132	1/2" Lock Washer	3
K	000614	1/4" x 2 1/4" RD HD MS	4	W	001503	1/2" x 1" Hex Bolt	3
L	002111	1/4" Flat Washers	4	X	002131	1/2" Flat Washers	3

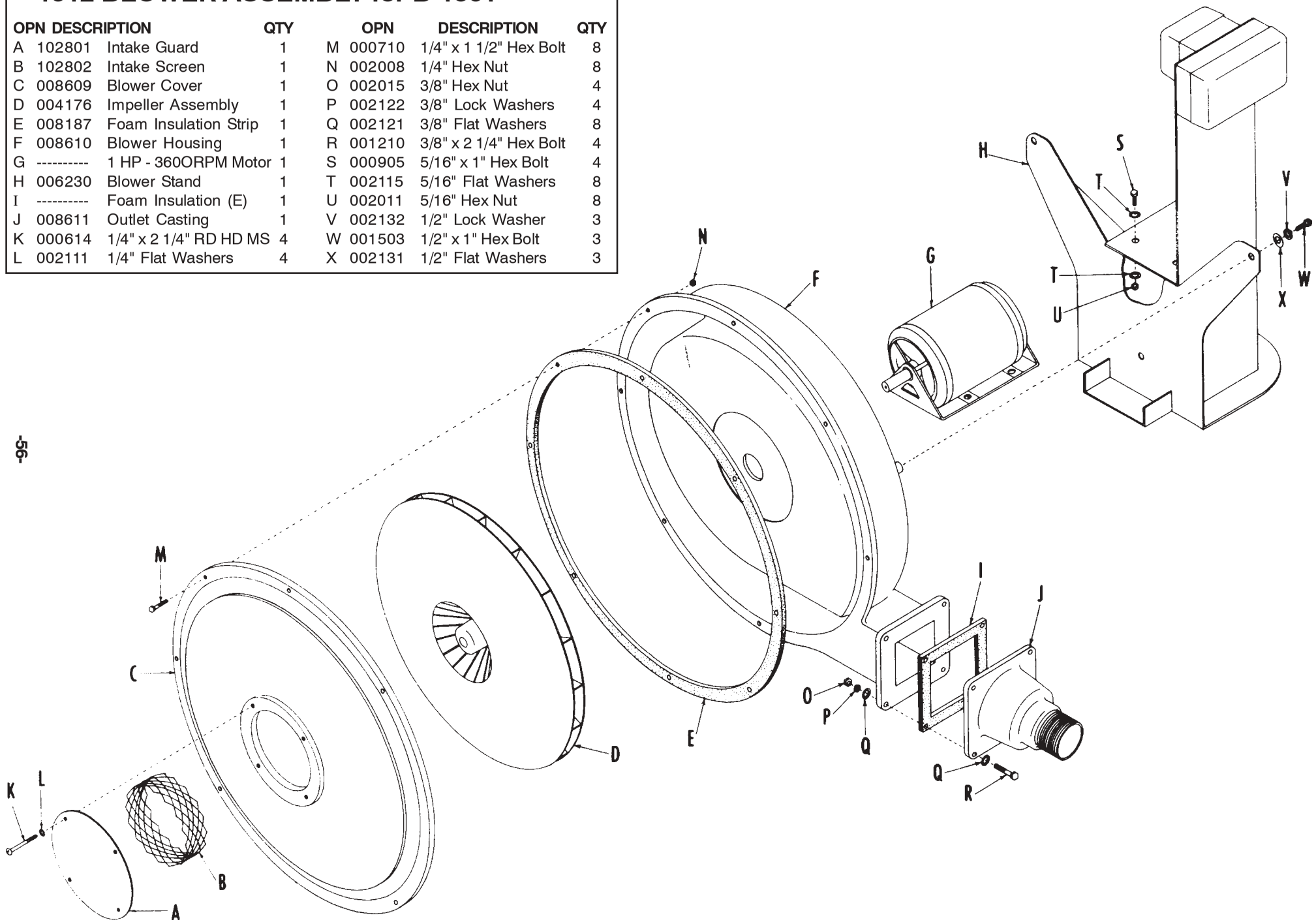

1912 BLOWER ASSEMBLY for B-1501
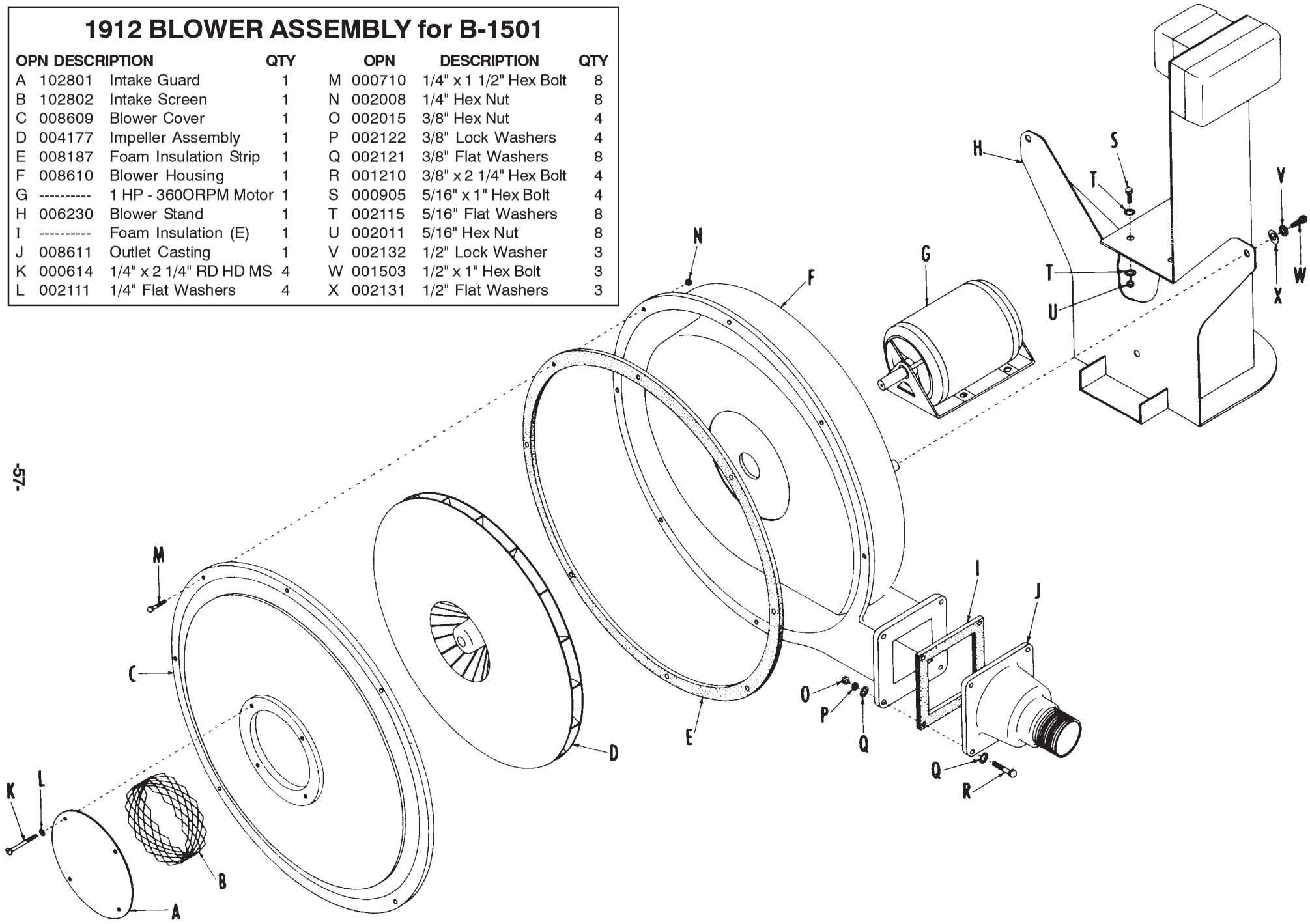
OPN	DESCRIPTION		QTY	OPN	DESCRIPTION	QTY
A	102801	Intake Guard	1	M	000710	1/4" x 1 1/2" Hex Bolt	8
B	102802	Intake Screen	1	N	002008	1/4" Hex Nut	8
C	008609	Blower Cover	1	O	002015	3/8" Hex Nut	4
D	004177	Impeller Assembly	1	P	002122	3/8" Lock Washers	4
E	008187	Foam Insulation Strip	1	Q	002121	3/8" Flat Washers	8
F	008610	Blower Housing	1	R	001210	3/8" x 2 1/4" Hex Bolt	4
G	----------	1 HP - 360ORPM Motor	1	S	000905	5/16" x 1" Hex Bolt	4
H	006230	Blower Stand	1	T	002115	5/16" Flat Washers	8
I	----------	Foam Insulation (E)	1	U	002011	5/16" Hex Nut	8
J	008611	Outlet Casting	1	V	002132	1/2" Lock Washer	3
K	000614	1/4" x 2 1/4" RD HD MS	4	W	001503	1/2" x 1" Hex Bolt	3
L	002111	1/4" Flat Washers	4	X	002131	1/2" Flat Washers	3