COMBUSTION SAFEGUARD SYSTEM NUMBER 6

With FM proof of closure switch.
Fireye MC 120
Watlow F4 Controller
Watlow Series 97 High Limit

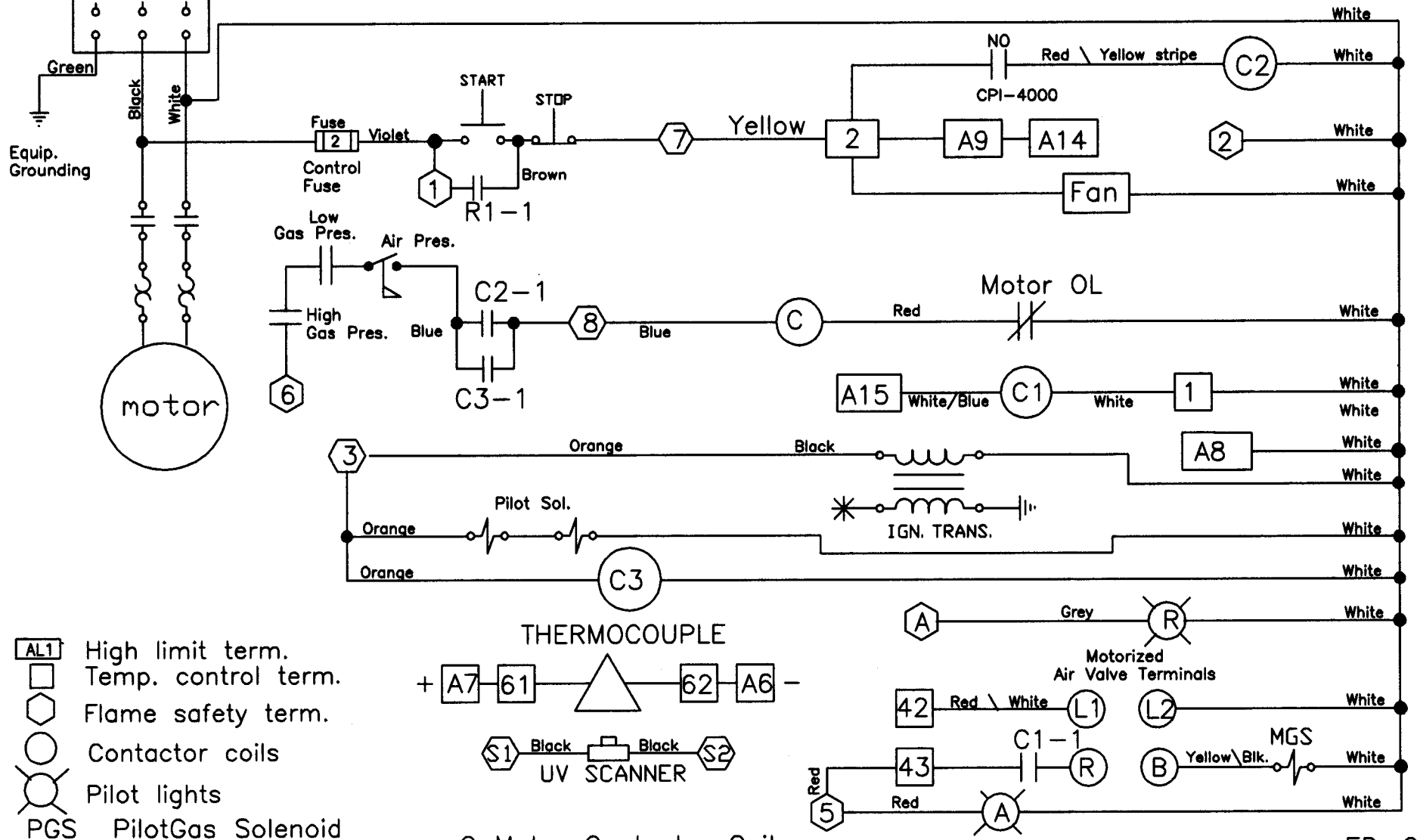

AL1 High limit term.
Temp. control term.
Flame safety term.
Contactor coils
Pilot lights

PGS PilotGas Solenoid
APS Air Presure Switch
1 OL Air Pres. Switch
R1 Blower Contactor

C Motor Contactor Coil
R-1,R-2 Relay Contacts
MGS Main Gas Solenoid

ED-0125

Combustion Safeguard System No 6	
With proof of closure Switch	
M I F C O	2/27/2003