COMBUSTION SAFEGUARD SYSTEM NUMBER 6
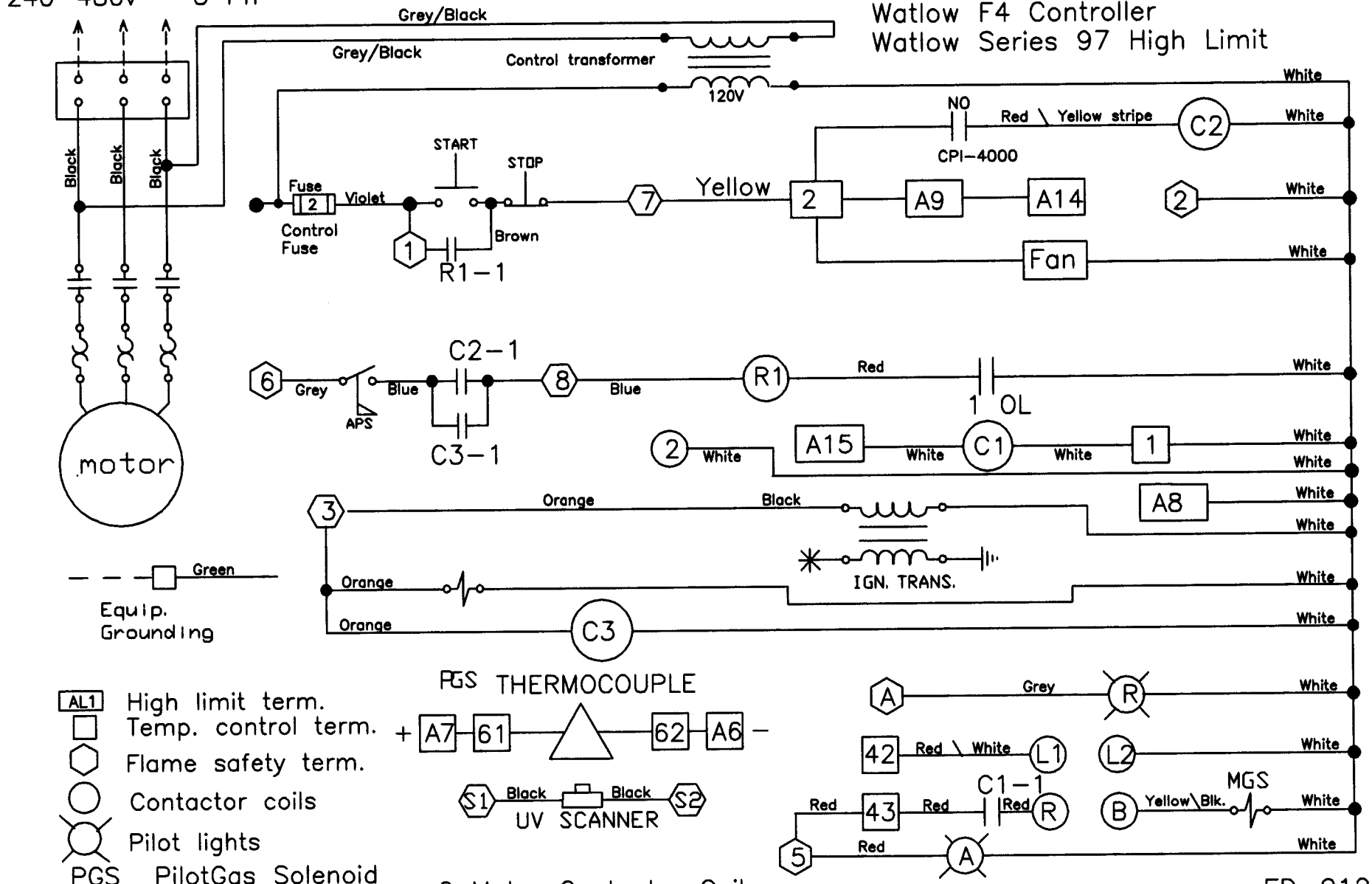
With proof of closure switch.
Fireye MC 120
Watlow F4 Controller
Watlow Series 97 High Limit